WARRANTY REGISTRATION
enviro.com/warranty

E30I

GAS INSERT - LOG SET w/ IPI Valve

OWNER'S MANUAL



Report # 0268GN023S

WARNING: If the information in this manual is not followed exactly, a fire or explosion may result causing property damage, personal injury or loss of life. Installation and service must be performed by a qualified installer, service agency or the gas supplier.

CERTIFIED TO/ CERTIFIÉ AUX: ANSI Z21.88 / CSA2.33 VENTED GAS FIREPLACE HEATERS

Fr Version Française: www.enviro.com/fr.html

50-2597

Safety Precautions

WARNING:

FIRE OR EXPLOSION HAZARD

Failure to follow safety warnings exactly could result in serious injury, death, or property damage.

- Do not store or use gasoline or other flammable vapors and liquids in the vicinity of this or any other appliance.

- WHAT TO DO IF YOU SMELL GAS

- **Do not try to light any appliance.**
- **Do not touch any electrical switch; do not use any phone in your building.**
- **Leave the building immeadiately.**
- **Immeadiately call your gas supplier from a neighbor's phone. Follow the gas supplier's instructions.**
- **If you cannot reach your gas supplier, call the fire department.**

- Installation and service must be performed by a qualified installer, service agency or the gas supplier.

INSTALLER:
Leave this manual with the appliance.

CONSUMER:
Retain this manual for future reference.

This appliance may be installed in an after-market permanently located, manufactured (mobile) home, where not prohibited by local codes.

This appliance is only for use with the type of gas indicated on the rating plate. This appliance is not convertible for use with other gases, unless a certified kit is used.

Massachusetts installations (Warning): This product must be installed by a licensed plumber or gas fitter when installed within the Commonwealth of Massachusetts. Other Massachusetts code requirements: Flexible connector must not be longer than 36in., a shut off valve must be installed; only direct vent sealed combustion products are approved for bedrooms/bathrooms. A carbon monoxide detector is required in all rooms containing gas fired direct vent appliances. The fireplace damper must be removed or welded in the open position prior to installation of a fireplace insert.

Safety Precautions

FOR SAFE INSTALLATION AND OPERATION OF YOUR "ENVIRO" HEATER, PLEASE CAREFULLY READ THE FOLLOWING INFORMATION:

• All ENVIRO gas-fired appliances must be installed in accordance with their instructions. Carefully read all the instructions in this manual first. Consult the building authority having jurisdiction to determine the need for a permit prior to commencing the installation.

• **NOTE:** Failure to follow these instructions could cause a malfunction of the fireplace, which could result in death, serious bodily injury, and/or property damage.

• Failure to follow these instructions may also void your fire insurance and/or warranty.

GENERAL

• Installation and repair should be done by a qualified service person. The appliance should be inspected before the first use and, at least, annually by a qualified service person. More frequent cleaning may be required due to excessive lint from carpeting, bedding material, etc. It is imperative the control compartments, burners and circulating air passageways of the appliance be kept clean.

• Due to high temperatures, the appliance should be located out of high traffic areas and away from furniture and draperies.

Children and adults should be alerted to the hazards of high surface temperatures and should stay away to avoid burn or clothing ignition.

• Young children should be carefully supervised when in the same room as the appliance. Toddlers, young children and others may be susceptible to accidental contact burns. A physical barrier is recommended if there are at risk individuals in the house. To restrict access to a fireplace or stove install an adjustable safety gate to keep toddlers, young children and other at risk individuals out of the room and away from hot surfaces. Any safety screen, guard, or barrier removed for servicing an appliance must be replaced prior to operating the appliance.

• Clothing or other flammable materials should not be placed on or near the appliance.

DANGER



HOT GLASS WILL CAUSE BURNS

DO NOT TOUCH GLASS UNTIL COOLED.

NEVER ALLOW CHILDREN TO TOUCH GLASS.

A barrier designed to reduce the risk of burns from the hot viewing glass is provided with this appliance and shall be installed for the protection of children and other at-risk individuals.

• A barrier designed to reduce the risk of burns from the hot veiwing glass is provided with this appliance and shall be installed for the protection of children and other at-risk individuals. If the barrier becomes damaged, the barrier shall be replaced with the manufacturer's barrier for this appliance

FOR YOUR SAFETY

• Installation and service must be performed by a qualified installer, service agency or gas supplier.

• This installation must conform to local codes or, in the absence of local codes, with the National Fuel Gas Code, ANSI Z223.1/NFPA 54, or the Natural Gas and Propane Installation Code, CSA B149.1.

• To prevent injury, do not allow anyone who is unfamiliar with the stove to operate it.

• To prevent injury, if the pilot or pilot and burners have gone out on their own, open the glass door and wait 5 minutes to air out before attempting to re-light the stove.

• Always keep the area around these appliances clear of combustible material, gasoline and other flammable liquids and vapours.

• These appliances should not be used as a drying rack for clothing or for hanging Christmas stockings/decorations.

• Due to the paint curing on the stove, a faint odor and slight smoking will likely be noticed when the stove is first used. Open a window until the smoking stops.

Always connect this gas stove to a vent system and vent to the outside of the building envelope. Never vent to another room or inside the building. Make sure the specified vent pipe is used, properly sized and of adequate height to provide sufficient draft. Inspect the venting system annually for blockage and signs of deterioration.

WARNING: Failure to position the parts in accordance with the diagrams in this booklet, or failure to use only parts specifically approved with this appliance, may result in property damage or personal injury.

WARNING: Do not operate with the glass front removed, cracked or broken. Replacement of the glass should be done by a licensed or qualified service person.

• Never use solid fuels such as wood, paper, cardboard, coal, or any flammable liquids, etc., in this appliance.

• Do not use this appliance if any part has been under water. Immediately call a qualified service technician to inspect the appliance and to replace any part of the control system or any gas control which has been under water.

• Do not abuse the glass by striking it or slamming the door shut.

• If the E30 unit is pulled out of its installation, and the vent-air intake system is disconnected for any reason, ensure that the vent-air intake pipes are reconnected and re-sealed in accordance to the instructions noted in Initial Installation - Venting.

Table of Contents

Safety Precautions....2
Table of Contents....4
Codes And Approvals....5
Specifications....6
- Rating Label Location....6
- Dimensions....6
- Install Depth....6
- E33 Options Dimensions....7

Operating Instructions....8
- Lighting and Turning Off Instructions....8
- Venturi Adjustment....9
- Normal Sounds During Operation....9
- Remote Control Operations....9
- System Description....10
- Technical Data....10
- Transmitter....10
- Battery Holder....11
- Operating Procedure....12

Maintenance And Service....16
- Cleaning The Painted Surfaces....16
- Glass Door Removal....16
- Cleaning The Glass....16
- Cleaning The Firebox....17
- Replacing The Glass....17
- Check Pilot and Burner Flames....17
- Removing Valve Cover....17
- Fuel Conversion....18

Initial Installation....20
- Clearances to Combustibles....20
- Minimum Fireplace Size....20
- Non-Combustible Build-Out....20
- Venting....21
- Baffle Plate Adjustment....23
- Installing the Unit....24
- Zero Clearance Fireplace Installation....26
- Electrical Requirements....27
- Gas Line Connection....28
- Adjusting The Pilot Flame....29

Secondary Installation....30
- Safety Screen Installation / Removal....30
- Optional Base Shelf & Riser....30
- Optional Trimmable Panels....31
- Surround Panel Installation....32
- Firebox Liner and Burner Tube Removal / Installation....33
- Log Set and Ember Removal / Installation....34

Troubleshooting....38
Parts List....41
Parts Diagram - Components....42
Warranty....43
Installation Data Sheet....44

Codes And Approvals

DIRECT VENT: This type is identified by the suffix DV. This appliance draws all of its air for combustion from outside the dwelling, through a specially designed vent pipe system.

This appliance has been tested and approved for installations from 0 feet to 4500 feet (1372 m) above sea level.

In the USA: The appliance may be installed at higher altitudes. Please refer to your American Gas Association guidelines which state: the sea level rated input of Gas Designed Appliances installed at elevations above 2000 (610 m) feet is to be reduced 4% for each 1000 feet (305 m) above sea level. Refer also to local authorities or codes which have jurisdiction in your area regarding the de-rate guidelines.

In Canada: When the appliance is installed at elevations above 4500 feet (1372 m), the certified high altitude rating shall be reduced at the rate of 4% for each additional 1000 feet (305 m).

- This appliance has been tested by INTERTEK & OMNI-Test Laboratories and found to comply with the established VENTED GAS FIREPLACE HEATER standards in CANADA and the USA as follows:

DIRECT VENTED GAS FIREPLACE INSERT HEATER

TESTED AND LISTED TO: ANSI Z21.88 / CSA 2.33 VENTED GAS FIREPLACE HEATERS

CSA 2.17 GAS FIRED APPLIANCES FOR HIGH ALTITUDES

CSA P.4.1 TESTING METHOD FOR MEASURING ANNUAL FIREPLACE EFFICIENCY

This ENVIRO E30 Fireplace Insert:

- Has been certified for use with either natural or propane gases. (See rating label.)
- Is not for use with solid fuels.
- Is approved for bedroom or bed sitting room. (**IN CANADA**: must be installed with a permanent wall thermostat for bedroom installations. Consult the authority having local jurisdiction in your area. **IN USA**: see current ANSI Z223.1 for installation instructions.)
- Must be installed in accordance with local codes. If none exist, use current installation code CAN/CGA B149 in Canada or ANSI Z223.1/NFPA 54 in the USA.
- Must be properly connected to an approved venting system and not connected to a chimney flue serving a separate solid-fuel burning appliance.
- Is not approved for closet or recessed installations.

IMPORTANT NOTICE (Regarding first fire up): When the unit is turned on for the first time, it should be turned onto high without the fan on for the first 4 hours. This will cure the paint, logs, gasket material and other products used in the manufacturing process. It is advisable to open a window or door, as the unit will start to smoke and can irritate some people. After the unit has gone through the first burn, turn the unit off, let the unit get cold then remove the glass door and clean it with a good gas fireplace glass cleaner, available at your local ENVIRO dealer. See "Door Removal" and "Cleaning The Glass" sections.

COLD CLIMATES:

NOTE: In cold climates, additional insulation may be used on some venting. It is recommended in cold climates to wrap the exhaust and intake venting for the final few feet before termination.

NATIONAL FIREPLACE INSTITUTE®

NFI

CERTIFIED

www.nficertified.org

We recommend that our gas hearth products be installed and serviced by professionals who are certified in the U.S. by the National Fireplace Institute® (NFI) as NFI Gas Specialists.

Specifications

Rating Label Location:

The rating label is located on the bottom of the unit, behind the front access door.

Dimensions:

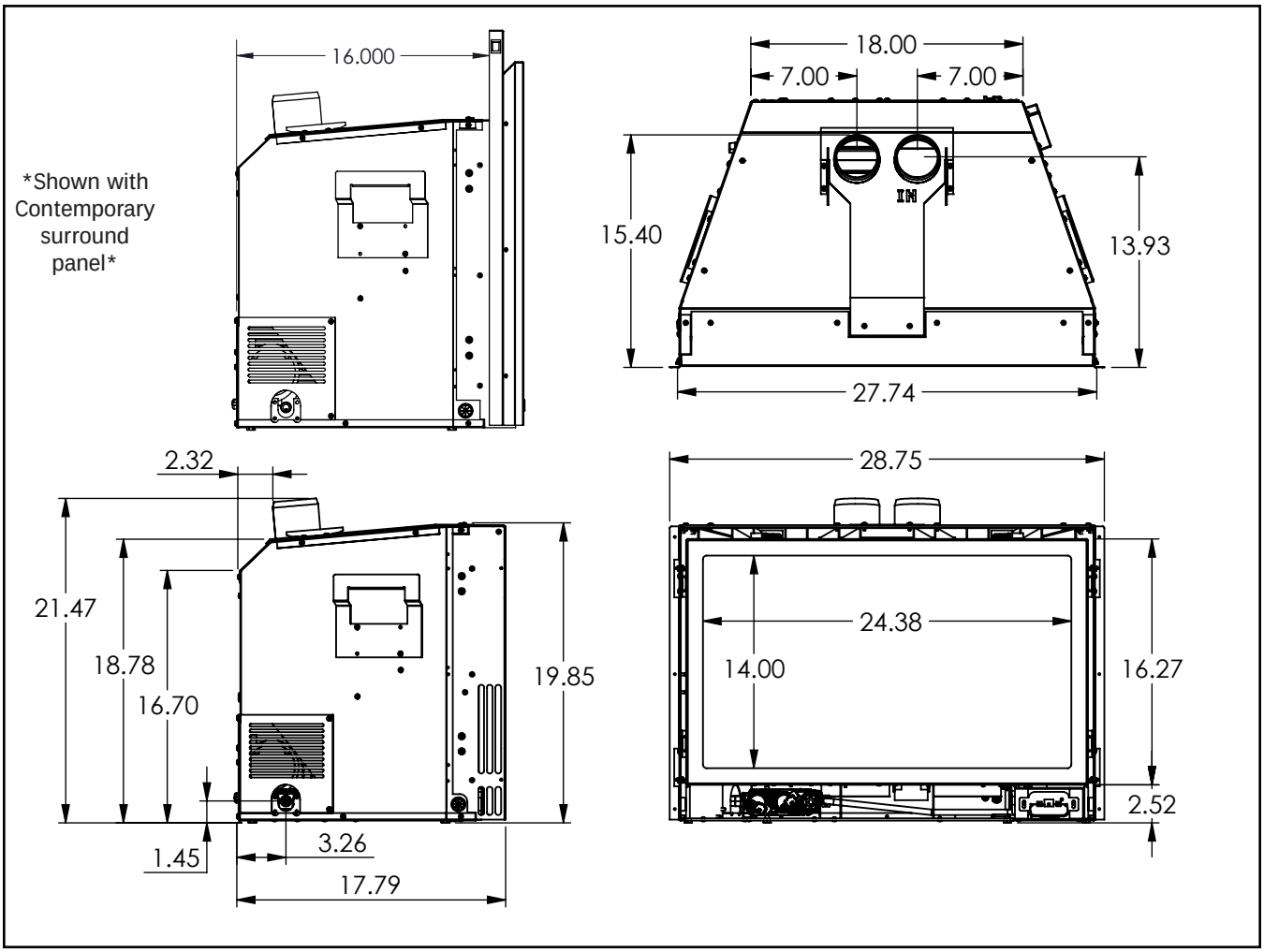

Figure 1: E30 Exterior Dimensions.

Install Depth:

The install depth will vary depending on what surround panel is used. Table 1 shows the required depth for each surround panel.

Surround Panel	Required Depth
Contemporary	16” [406 mm]
Extruded	
Modern	16 ⅞” [429 mm]
Slim & Elite Panels	17 ¼” [438 mm]

Table 1: Install Depths

Specifications

E30 Options Dimensions:

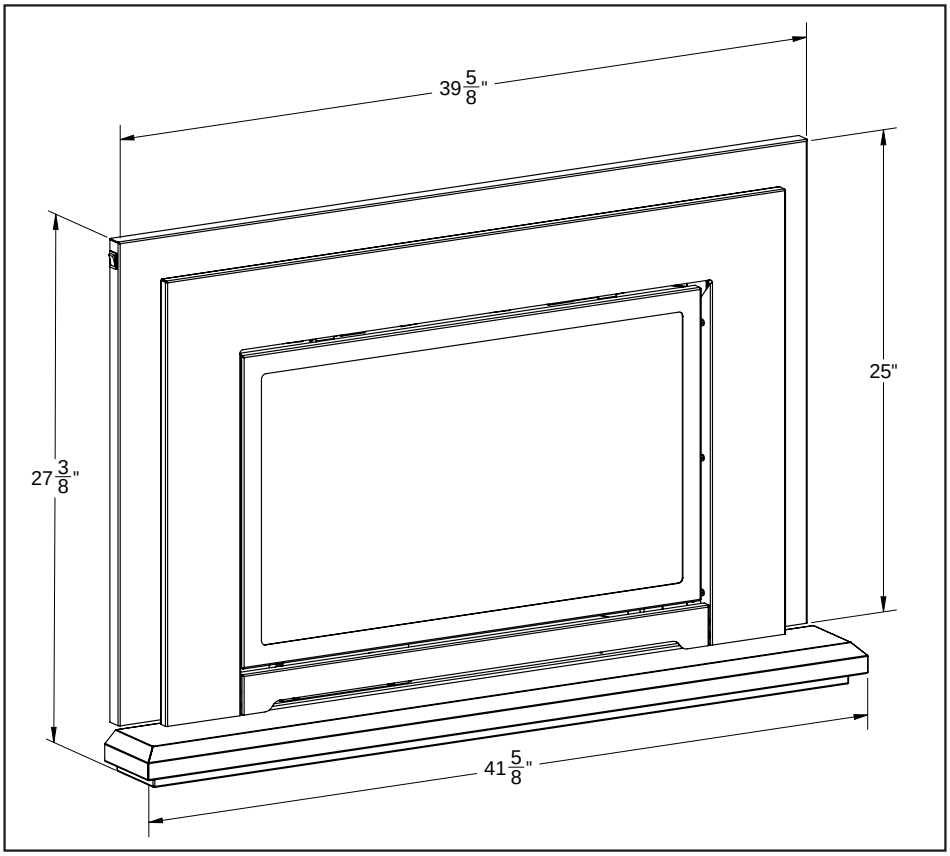

Figure 2: E30 Contemporary Surround with Base Shelf and Riser.

Table 2: E30 Options Dimensions.

	Regular Surround	Contemporary Surround	Extruded Surround
Height	25” (635mm)	25” (635mm)	25” (635mm)
Width	39 7/8” (1013 mm)	39 7/8” (1013 mm)	39 7/8” (1013 mm)
Trimmable Surround	Height		Width
	38” (965mm)		46” (1168mm)
	Base Shelf		**Base Shelf Riser**
Height	1 5/8” (41mm)		2 1/8” (54mm)
Width	41 5/8” (1057mm)		40 1/4” (1022mm)
Depth	Bottom 4 7/8” (112mm); Top 3 13/16” (97mm)		3 11/16” (94mm)

Operating Instructions

For Your Safety, Read Safety Precautions And Lighting Instructions Before Operating

WARNING: IF YOU DO NOT FOLLOW THESE INSTRUCTIONS EXACTLY A FIRE OR EXPLOSION MAY RESULT, CAUSING PROPERTY DAMAGE, PERSONAL INJURY OR LOSS OF LIFE.

Lighting and Turning Off Instructions:

FOR YOUR SAFETY READ BEFORE OPERATING

WARNING: IF YOU DO NOT FOLLOW THESE INSTRUCTIONS EXACTLY, A FIRE OR EXPLOSION MAY RESULT CAUSING PROPERTY DAMAGE, PERSONAL INJURY OR LOSS OF LIFE.

A. This appliance is equipped with an ignition device which automatically lights the pilot. Do not try to light the pilot by hand.

B. BEFORE OPERATING smell all around the appliance area for gas. Be sure to smell next to the floor because some gas is heavier than air and will settle on the floor.

WHAT TO DO IF YOU SMELL GAS:

- Do not try to light any appliance.
- Do not touch any electrical switch; do not use any phone in your building.
- Immediately call your gas supplier from a neighbor's phone. Follow the gas supplier's instructions.
- If you cannot reach your gas supplier, call the fire department.

C. Use only your hand to push in or turn the gas control knob. Never use tools. If the knob will not push in or turn by hand, don't try to repair it, call a qualified service technician. Force or attempted repair may result in a fire or explosion.

D. Do not use this appliance if any part has been under water. Immediately call a qualified service technician to inspect the appliance and to replace any part of the control system and any gas control which has been under water.

OPERATING INSTRUCTIONS

1. STOP! Read the safety information above on this label.
2. Read the owner's manual including the section on "Remote Control" operation.
3. Set the thermostat to the lowest setting.
4. Turn off all electric power to the appliance.
5. Do not attempt to light the pilot by hand.
6. Wait five (5) minutes to clear out any gas. Then smell for gas, including near the floor. If you smell gas, STOP! Follow "B" in the safety information above on this label. If you don't smell gas, go to the next step.
7. Turn on all electric power to the appliance.
8. Using the remote control, set thermostat to desired setting, or press the ON/OFF key on the remote. "ON" will be indicated on the display of the remote and an audible "beep" will be heard at the unit to indicate the command has been received.
9. This appliance is equipped with a completely automatic ignition and lighting control. The control will attempt to light the pilot several times if necessary. If it is unsuccessful, it will discontinue operations. If the appliance will not operate, follow the instructions "To Turn Off Gas To Appliance" and call your service technician or gas supplier.

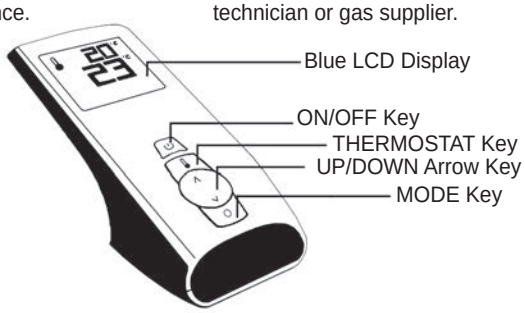

TO TURN OFF GAS TO APPLIANCE

1. Set thermostat to lowest setting, or press the ON/OFF Key. "OFF" will be indicated on the display and an audible "Beep" will be heard at the unit to indicate the command has been received.
2. Turn off all electric power to the appliance if service is to be performed.

C-12455

Figure 3: Lighting instruction label.

Operating Instructions

Venturi Adjustment:

The venturi adjustment lever is located on the right side of the unit, below the door (see Figure 4). To avoid touching hot surfaces under the unit, use the Door Tool to adjust the venturi.

The venturi allows the amount of air coming into the fireplace to be adjusted in order to accommodate different climates and venting arrangements. Start the pilot and then the burner. Make sure the pilot flame is burning normally and none of the burner ports are plugged. Let the fireplace burn for roughly fifteen (15) minutes and then examine the flames. The ideal flame will be blue at the base and light orange above. The flames should be of medium height. If the flames look like this, no venturi adjustment is needed. If the flames are fairly short and mostly blue, the fireplace is getting too much air. Therefore, the air shutter should be closed (push in) slightly until the correct flames are achieved. Flames that are very orange, with tall dark stringy tips are not getting enough air. Open (pull out) the venturi until the flames clean up. If the venturi is opened, then closed all the way, and the correct flames cannot be attained, turn off the gas and contact the dealer.

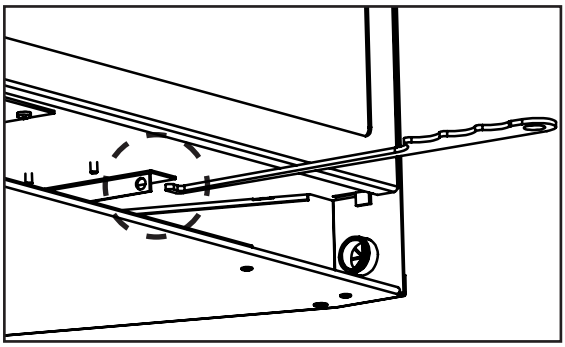

Figure 4: Adjusting the venturi air setting.

Warning: Incorrect venturi adjustment may lead to improper combustion, which is a safety hazard. Contact the dealer if there is any concern about the venturi adjustment.

Component	Sound & Reason
Fire Box	Creaking when heating up or cooling down.
Burner	Light pop or poof when turned off; this is more common with LP units.
Pilot Flame	Quiet whisper while the pilot flame in on.
Blower / Fan	Air movement that increases and decreases with the speed of the blower.
Gas Control Valve	Dull click when turning on or off, this is the valve opening and closing.
IFC	Beeps when remote control/transmitter buttons are pressed.

Table 3: Normal Sounds

Remote Control Operations:

The Proflame 2 GTMFLSA is a modular remote control system that directs the functions of the E30. The Proflame 2 GTMFLSA is configured to control the on/off main burner operation, its flame levels and provides on/off and Smart thermostatic control of the appliance.

Operating Instructions

System Description:

The Proflame 2 Remote Control System consists of two (2) elements:
1. Proflame 2 Transmitter.
2. Integrated Fireplace Controller (IFC) and wiring harness to connect to the gas valve, stepper motor battery holder, and convection fan.

ATTENTION!

- TURN "OFF" THE MAIN GAS SUPPLY OF THE APPLIANCE DURING INSTALLATION OR MAINTENANCE OF THE IFC.

- TURN "OFF" MAIN GAS SUPPLY TO THE APPLIANCE PRIOR TO REMOVING OR REINSERTING THE BATTERIES IN THE BATTERY HOLDER

Technical Data

Transmitter (Remote Control):

Supply voltage: 4.5 V (three 1.5 V AAA batteries)
Radio frequency: 315 MHz

Integrated Fireplace Controller (IFC):

Supply voltage: AC IN - 120 V / 60 Hz
Battery Backup IN - 6 Vdc - 200mA (four 1.5 V AA batteries)
Spark voltage / frequency: >10kV / 1Hz
Comfort modulating fan: 120 V / 60 Hz / 2A
Auxiliary: 120 V / 60 Hz / 5A

Transmitter:

The Proflame 2 Transmitter is a remote control with a blue backlit lcd display. It uses a streamline design with a simple button layout and informative lcd readout (Figure 5). The Transmitter is powered by three (3) AAA type batteries. A Mode Key is provided to Index between the features and a Thermostat Key is used to turn on/off or index through Thermostat functions (Figure 5 & 6).

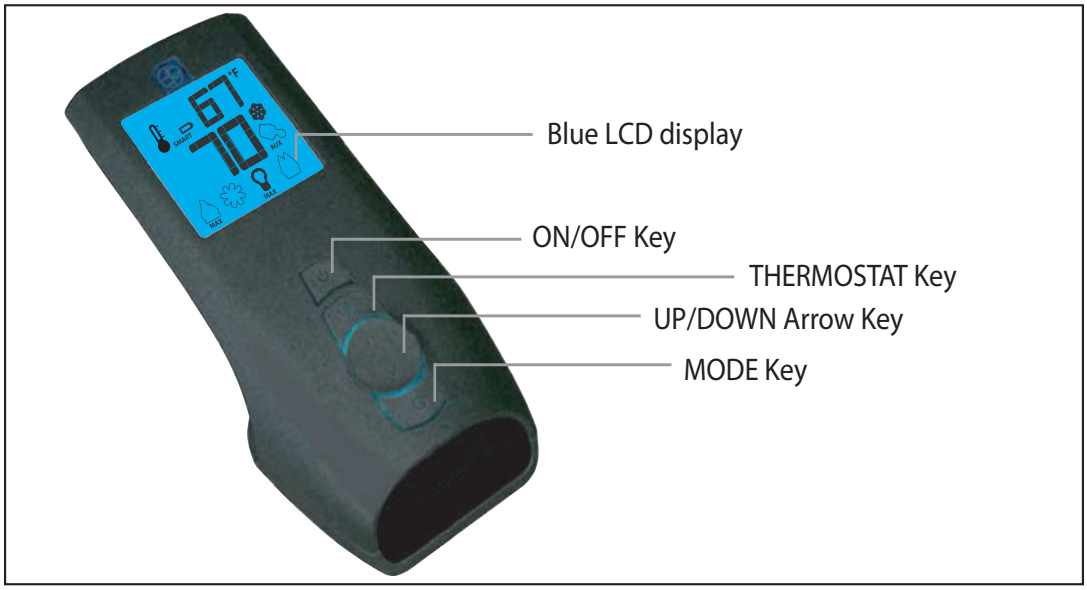

Figure 5: Proflame 2 Transmitter.

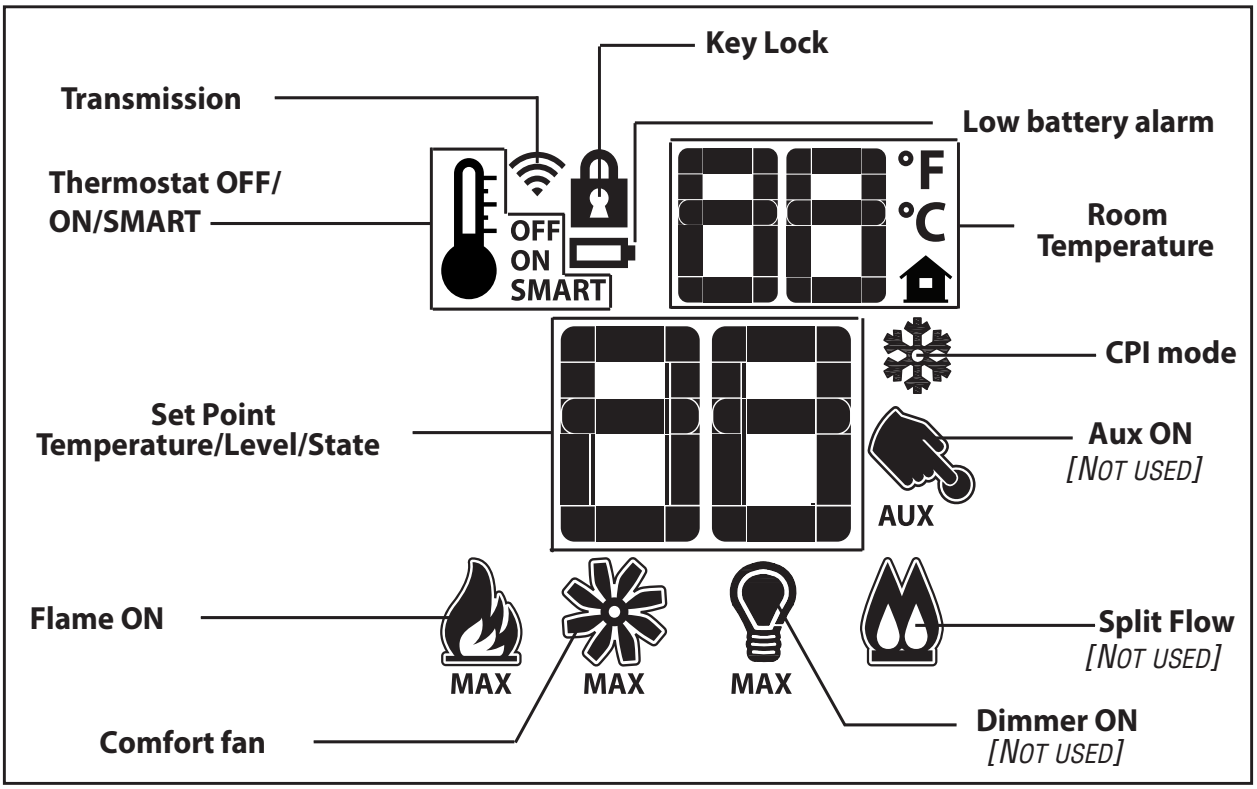

Figure 6: Proflame 2 Transmitter LCD Screen.

Battery Holder:

The Battery Holder (Figure 7) connects directly to the IFC with a wiring harness. The IFC is powered by four (4) AA type batteries. The IFC accepts commands via radio frequency from the Transmitter to operate the appliance in accordance with the particular Proflame system configuration. The Battery Holder has a three (3) position slider switch that can be set to one of three positions: ON (Manual Override), Remote (Remote control), or Off. The Battery Holder has a reset button at the front right corner that is used is to synchronize the Transmitter when using the for the first time, or after the batteries have been replaced.

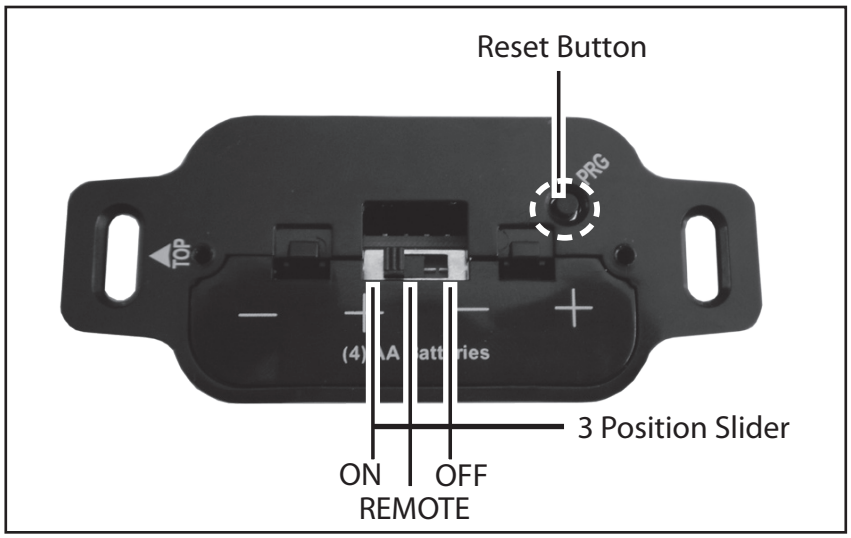

Figure 7: Battery Holder.

Operating Procedure:

Initializing The System For The First Time

Install the four (4) AA batteries into the IFC battery holder. Note the polarity of the battery and insert into the battery bay as indicated on the body of the battery holder. Press and release the reset button (see Figure 7).

The IFC will "beep" three (3) times to indicate that it is ready to synchronize with a Transmitter. Install the three (3) AAA type batteries in the Transmitter battery bay, located on the base of the Transmitter. With the batteries already installed in the Transmitter, push the 'ON' button. The IFC will "beep" four (4) times to indicate the Transmitter's command is accepted and sets to the particular code of that Transmitter. The system is now initialized.

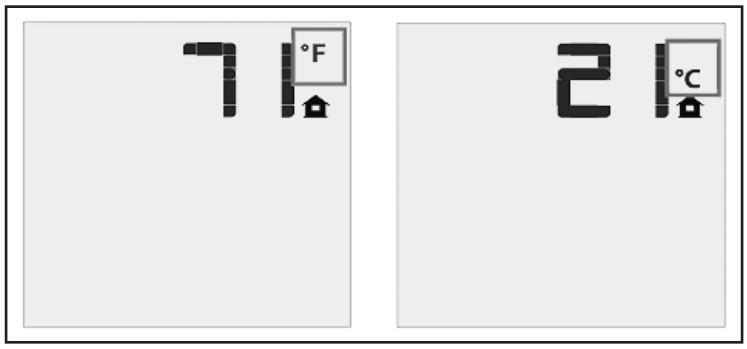

Figure 8: Remote Control Display in Farenheit and Celcius.

Temperature Indication Display

With the system in the "OFF" position, press the Thermostat Key and the Mode Key at the same time. Look at the LCD screen on the transmitter to verify that a °C or °F is visible to the right of the Room Temperature display (see Figure 8).

Turn on the Appliance

Press the ON/OFF Key on the Transmitter. The Transmitter display will show all active Icons on the screen. A single "beep" from the IFC will confirm reception of the command and will commence to first ignite the pilot light, followed by the main burner. This should take about 10 seconds to complete.

Turn off the Appliance

Press the ON/OFF Key on the Transmitter. The Transmitter LCD display will only show the room temperature and Icon (see Figure 9). A single "beep" from the IFC confirms reception of the command and both the pilot light (if the unit is not set to continuous pilot) and main burner will turn off.

Room Thermostat (Transmitter Operation)

The Remote Control can operate as a room thermostat. The thermostat can be set to a desired temperature to control the comfort level in a room. To activate this function, press the Thermostat Key (see Figure 5). The LCD display on the Transmitter will change to show that the room thermostat is "ON" and the set temperature is now displayed (see Figure 9). To adjust the set temperature, press the Up or Down Arrow Keys until the desired set temperature is displayed on the LCD screen of the Transmitter.

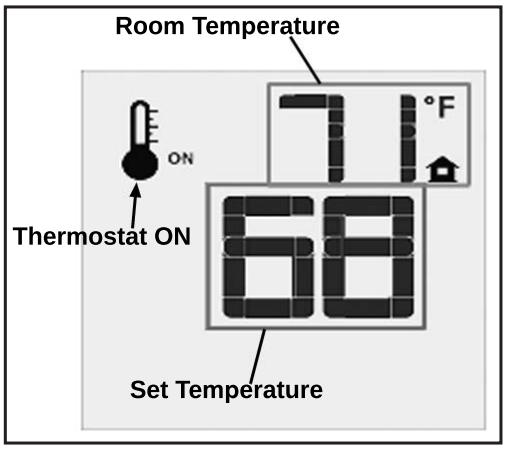

Figure 9: Remote Control Displays Set Temperature.

Smart Thermostat (Transmitter Operation)

The Smart Thermostat function adjusts the flame height in accordance to the difference between the set point temperature and the actual room temperatures. As the room temperature gets closer to the set point the Smart Function will modulate the flame down. To activate this function, press the Thermostat Key (Figure 5) until the word "SMART" appears to the right of the temperature bulb graphic (Figure 10). To adjust the set temperature, press the Up or Down Arrow Keys until the desired set temperature is displayed on the LCD screen of the Transmitter.

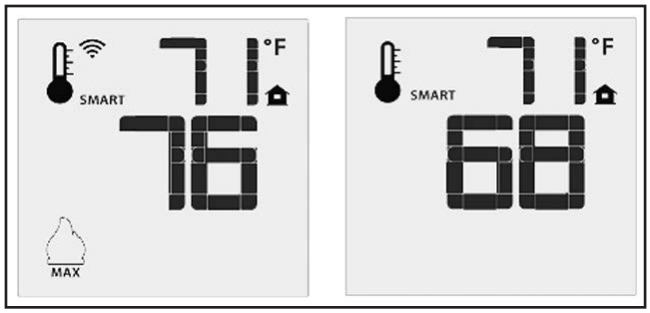

Figure 10: Remote Control's Smart Flame Function.

Remote Flame Control

The Proflame 2 GTMF has six (6) flame levels. With the system on, and the flame level at the maximum in the appliance, pressing the Down Arrow Key once will reduce the flame height by one step until the flame is turned off. The Up Arrow Key will increase the flame height each time it is pressed. If the Up Arrow Key is pressed while the system is on but the flame is off, the flame will come on in the high position (refer to Figure 11 below). A single "beep" will confirm reception of the command.

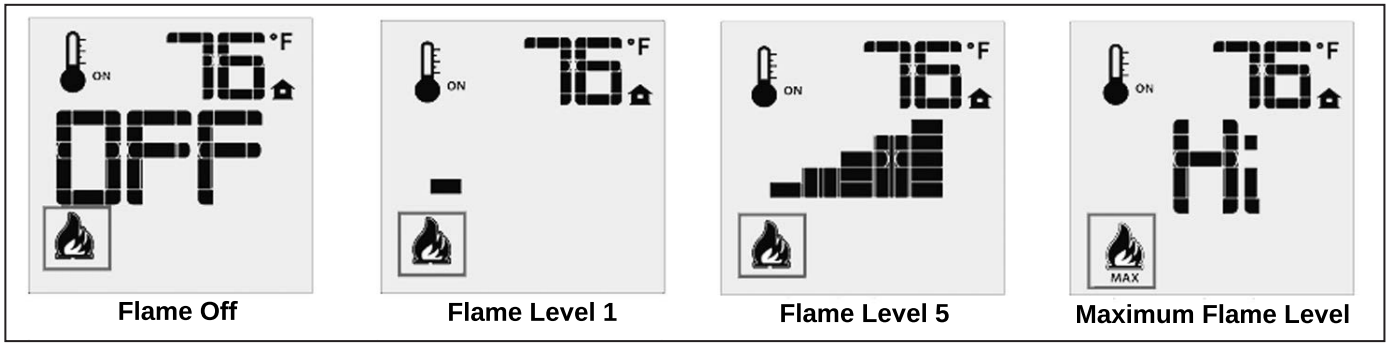

Flame Off | Flame Level 1 | Flame Level 5 | Maximum Flame Level

Figure 11: Remote Control's Flame Levels.

Fan Control

The E30 comes with a convection fan that can be controlled with the Transmitter. The fan speed can be adjusted thorugh six (6) speeds. To control the fan press the MODE key (Figure 5) to index to the fan control icon (Figure 12). Use the UP/DOWN arrow keys to turn on, off, or adjust the fan speed (Figure 12). A single beep from the IFC will confirm the command has been received

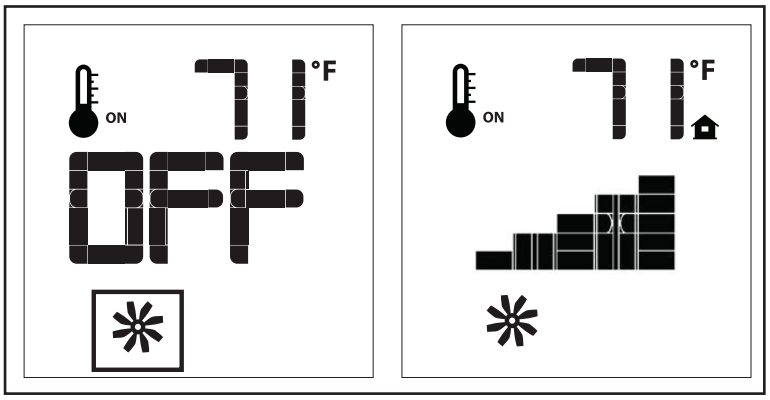

Figure 12: Fan Control

Light Control

This function is not used on the E30 and can be disregarded.

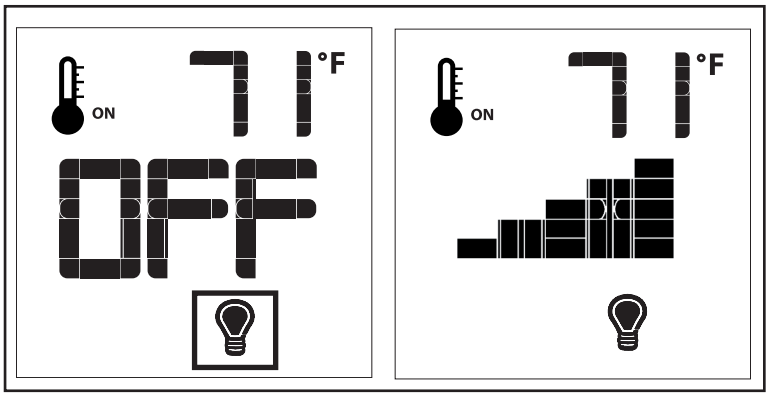

Figure 13: Light Control

Split Flow Control
This function is not used on the E30 and can be disregarded.

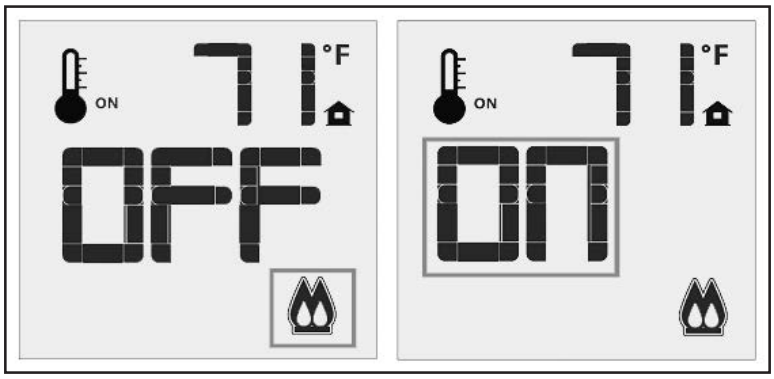

Figure 14: Split Flow Control

Aux Control
This function is not used on the E30 and can be disregarded.

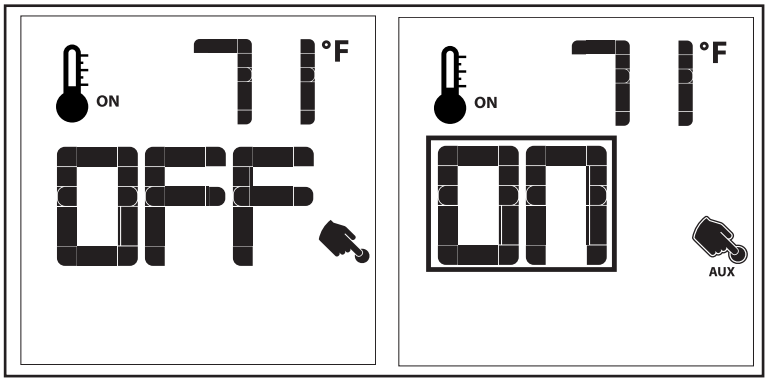

Figure 15: Aux Control

Key lock
This function will lock the keys to avoid unsupervised operation. To activate this function, press the MODE and UP keys at the same time and the a lock will appear (see Figure 16). To de-activate this function, press the MODE and UP Keys at the same time.



Figure 16: Remote Control Locked.

Low Battery Power Detection

Transmitter: The life span of the remote control batteries depends on various factors: quality of the batteries used, the number of ignitions of the appliance, the number of changes to the room thermostat set point, etc. When the Transmitter batteries are low, a Battery Icon will appear on the LCD display of the Transmitter (see Figure 17) before all battery power is lost. When the batteries are replaced this Icon will disappear.

IFC: The life span of the IFC batteries depends on various factors during a prolonged power outage: quality of the batteries used, the number of ignitions of the appliance, the number of changes to the room thermostat set point etc. When the IFC batteries are low, No "beep" will be emitted when it receives an On/Off command from the Transmitter. This is an alert for a low battery condition for the IFC. When the batteries are replaced the "beep" will be emitted from the IFC when the ON/OFF Key is pressed (See Initializing the System for the First Time).

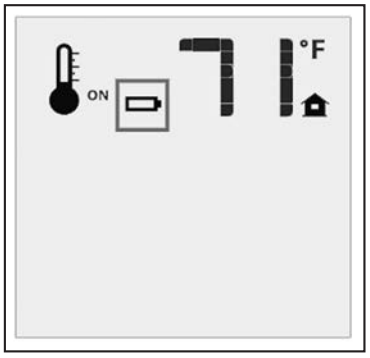

Figure 17: Low Battery Indicator.

Switching to Continuous Pilot Mode

When the fireplace is turned off press the mode key to index to the constant pilot (CPI) mode icon (see figure 6). Pressing the up arrow key will select Continuous Pilot Ignition (CPI) and pressing the down arrow key will return to IPI. Once a selection is made the IFC will beep once to confirm it had received the command. **NOTE: It is recommended to use the continuous pilot mode during the winter when the outside temperature is below 50°F (10°C) to keep the chimney properly heated for updraft during burner ignition.** Continuous pilot mode also keeps the firebox warm which eliminates both heat loss to cold air that is trapped inside the firebox as well as excessive exhaust vapour condensation on the door glass.

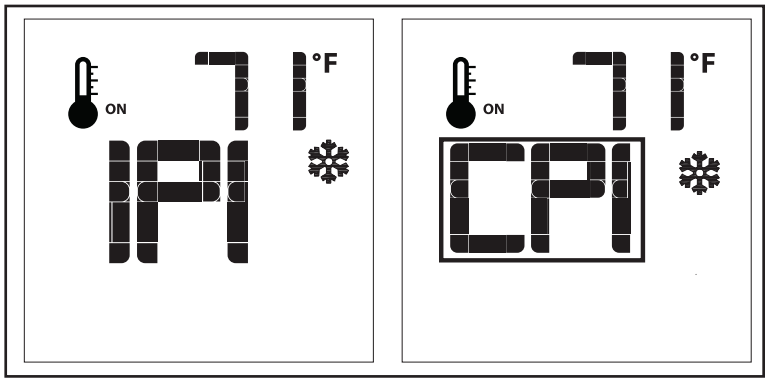

Figure 18: CPI Pilot Mode

WARNING: Fire Hazard. Can cause severe injury or death. The IFC causes ignition of the appliance. The appliance can turn on suddenly. Keep away from the appliance burner when operating the remote system.

WARNING: Shock Hazard. Can cause severe injury or death. This device is powered by line voltage. Do not try to repair this device. In no way is the enclosure to be tampered with or opened. Disconnect from line voltage before performing any maintenance.

CAUTION: Property Damage Hazard. Excessive heat can cause property damage. The appliance can stay lit for many hours. Turn off the appliance if it is not going to be attended for any length of time. Always place the Transmitter where children cannot reach it.

Maintenance And Service

Warning: Failure to position the parts in accordance with this manual, or failure to use only parts specifically approved with this appliance, may result in property damage or personal injury.

At least once a year, run through the following procedures to ensure the system is clean and working properly. Check the burner to see if all the ports are clear and clean. Check the pilot to make sure it is not blocked by anything. The pilot flame should be blue with little or no yellow on the tips.

The venting system must be periodically examined; it is recommended the examination is done by a qualified person.

Cleaning The Painted Surfaces:

Painted surfaces should be periodically wiped with a damp cloth when the unit is cool.

Glass Door Removal:

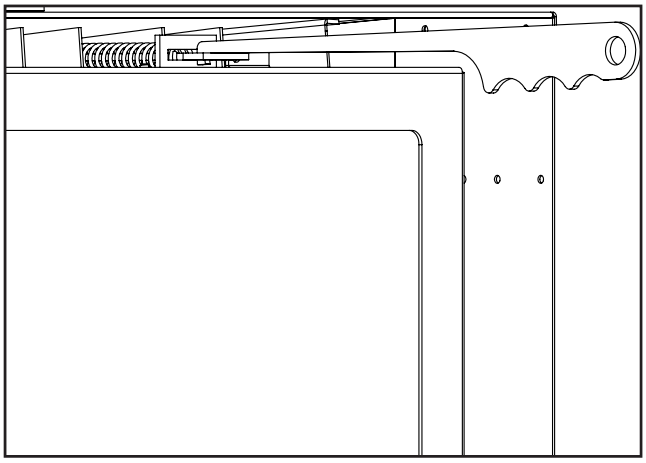

Figure 19: Door Release.

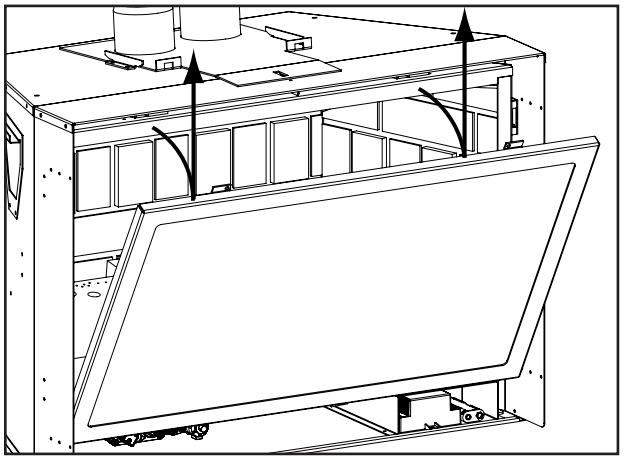

Figure 20: Door Removal.

Remove the glass door by placing the hooked end of the door release tool in the hole on the door latch mechanism (see Figure 19) and pulling the latch out then over to the center of the unit. When the two (2) latches have been released, tilt the door forward and then lift up to unhook the bottom door tabs (see Figure 20). Re-assemble in the reverse order.

Warning: Do not touch or attempt to remove the glass if the fireplace is not completely cool.
Never operate the fireplace with the glass removed.

CAUTION GLASS MAY SEPARATE FROM DOOR.

Cleaning The Glass:

When the fireplace is cool, remove the glass door as instructed above. Check the gasket material on the back of the glass, making sure that it is attached and intact.

During a cold start up, condensation will form on the glass. This is a normal condition with all fireplaces. However, this condensation can allow dust and lint to cling to the glass surface. Initial paint curing of the appliance can leave a slight film on the glass. The glass will need cleaning after the fireplace has cooled off from the first burn and about two weeks after first burn. **Use a mild glass cleaner and a soft cloth**. **Abrasive cleaners will damage the glass and painted surfaces.** Depending on the amount of use, the glass should require cleaning no more than two or three times a season. **Do not clean the glass when it is hot.**

Maintenance And Service

Cleaning The Firebox:

Remove the logs carefully, as they are very fragile. Gently remove all the embers and rock wool and place on a paper towel. Vacuum the bottom of the firebox thoroughly. Carefully clean any dust off the logs and remove any lint from the burner and pilot. At this time, inspect the burner tube for cracking or severe warping. If a problem is suspected, contact the dealer. Check the logs for deterioration or large amounts of soot; a small amount on the logs is normal. Replace the logs and embers as in the Secondary Installation - Log Set and Ember Installation section. If new/more embers and rock wool are required, contact your nearest ENVIRO dealer.

Replacing The Glass:

The glass in the fireplace is a high temperature ceramic. If the glass is damaged in any way, a factory replacement is required (see Parts List). Wear gloves when handling damaged glass door assembly to prevent personal injury. Do not operate with the glass front removed, cracked or broken. Removal and replacement of the glass from the door **must** be done by a licensed or qualified service person. **The glass must be purchased from an ENVIRO dealer. No substitute materials are allowed.** Remove the door (see page 16). The replacement glass will come with a new gasket installed. Remove any silicone remnants from the door. Apply high temperature silicone to the two vertical faces of the door and install the new piece of glass with gasket (be sure to maintain edge clearances). Apply even pressure to the glass to allow the silicone to adhere to the gasket material.

Check Pilot and Burner Flames:

Periodically do a visual check of the pilot flames. One flame should encompass the flame sensor (see page 29) and the other should burn over the burner ports. Also check that the burner is operating correctly, refer to Venturi Adjustment section.

Removing Valve Cover:

The valve cover can be removed to access the gas valve.

1. Remove the glass door as shown in Maintenance and Service - Glass Door Removal.
2. Remove the log set and ember material. Refer to Secondary Installation - Log Set and Ember Installation.
3. Remove the front brick liner and the burner tube. Refer to Secondary Installation - Firebox Liner and Burner Tube Removal.
4. Use a T-20 screwdriver to remove the two screws that hold down the left burner support.
5. Then remove the six screws that hold the valve cover in place (pointed out in Figure 21).

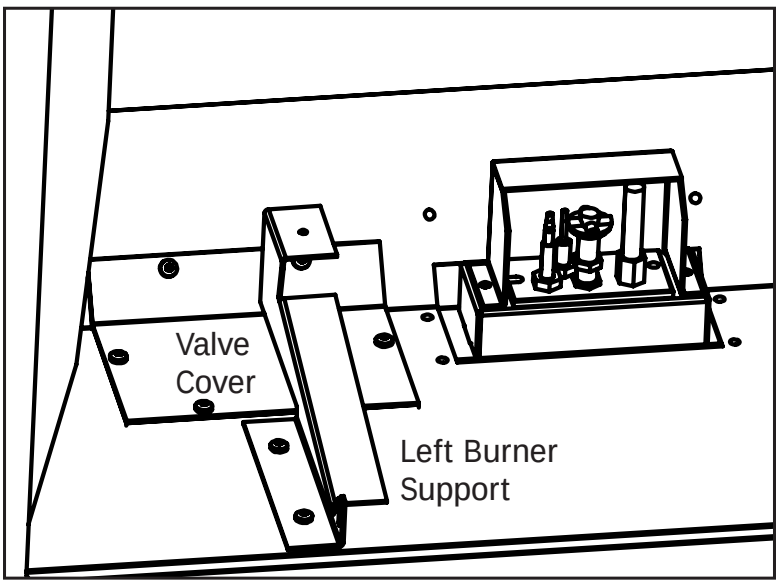

Figure 21: Valve Cover and Burner Support.

FUEL CONVERSION:

TO BE INSTALLED BY A QUALIFIED SERVICE AGENCY ONLY

Please read and understand these instructions before installing.

Warning: This conversion kit shall be installed by a qualified service agency in accordance with the manufacturer's instructions and all applicable codes and requirements of the authority having jurisdiction. If the information in these instructions is not followed exactly, a fire, explosion or production of carbon monoxide may result causing property damage, personal injury or loss of life. The qualified service agency is responsible for the proper installation of this kit. The installation is not proper or complete until the operation of the converted appliance is checked as specified in the manufacturer's instructions supplied with the kit.

Kit Parts List for all E30I models:

1 - Burner Orifice (NG: #37) or (LP: #52)
1 - Installation instruction sheet
1 - Pilot Orifice (NG: 0.2) or (LP: 0.14)
1 - Servo Regulator with diaphragm
2 - Conversion labels

Carefully inspect all parts supplied with this conversion kit. If any parts have been damaged or are missing, contact your dealer, distributor or courier company to have them replaced before starting this installation.

Conversion Kit Installation:

1. Turn the unit off by pressing the ON/OFF Key on the remote and shut off gas supply at the shut-off valve upstream of the unit. CAUTION: The gas supply must be shut off prior to disconnecting the electrical power and before proceeding with the conversion. Allow the valve and unit to cool down to room temperature.
2. Remove the glass door as shown in the MAINTENANCE AND SERVICE - GLASS DOOR REMOVAL.
3. Carefully remove the log set.
4. Remove the burner as shown in MAINTENANCE AND SERVICE - BURNER REMOVAL.
5. Convert the pilot orifice:
   a) Using a $^{7}/_{16}$" wrench, loosen the pilot head counter clockwise and fully remove
   b) Remove the existing orifice and replace with the one supplied in the kit (see Figure 22)
   c) Re-install the pilot head and tighten until it is back in the proper position (see Figure 23)
6. Convert the burner orifice:
   a) Remove the main burner orifice with a 3/8" deep socket
   b) Put a bead of pipe-thread sealant into the orifice mount. DO NOT OVER-TIGHTEN
   c) Install new orifice.



Figure 22 Pilot Orifice



Figure 23 Proper Pilot Position

7. Convert the SIT gas valve:

a) Use a T-20 driver to remove the two screws that hold the servo regulator to the gas valve and disconnect the wire harness from the IFC.

b) Remove the rubber regulator diaphragm that is situated between the servo regulator and the valve body. The new servo regulator already has this diaphragm installed.

c) Install the LP servo regulator, with the new longer T-20 screws included in the kit and connect the harness to the IFC.

8. Reinstall the burner, log set, and glass door. Also refer to Secondary Installation - Log Set Installation in your Owner's Manual. When re-installing the burner, ensure that the burner to pilot hood and shield relationship is similar to what is shown in Figure 24.

9. Reconnect the main gas line if it was disconnected and open the shut-off valve at the gas line to the unit.

10. Reconnect the electrical power to the unit.

11. Use a small brush to apply a warm soapy water solution to all gas connections (use a half dish soap and half warm water). If a gas leak is present, bubbling will occur. Gas leaks can be repaired by using an approved pipe thread sealant or approved Teflon tape. NEVER USE AN OPEN FLAME WHEN TESTING FOR LEAKS.

12. Relight the pilot and confirm the flame properly covers the flame sensor (see page 29). Should the pilot require adjustment, turn the adjustment screw (see page 29) clockwise to decrease or counterclockwise to increase until the correct flame is achieved.

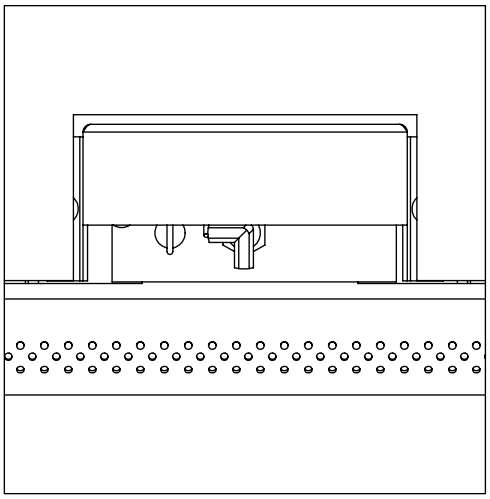

Figure 24. Correct Pilot

13. Relight the main burner in both the "MAX" and low positions to verify proper burner ignition, operation and proper flame appearance (figure 67, page 37). Confirm the inlet and manifold pressures are within the acceptable ranges as directed in section Intial Intallation - Gas Line Connection and Testing. **If the E30 has been installed at an altitude higher than 2000ft (610m) it is required to de-rate the unit accordingly:**

In the USA: The appliance may be installed at higher altitudes. Please refer to your American Gas Association guidelines which state: the sea level rated input of Gas Designed Appliances installed at elevations above 2000 (610 m) feet is to be reduced 4% for each 1000 feet (305 m) above sea level. Refer also to local authorities or codes which have jurisdiction in your area regarding the de-rate guidelines.

In Canada: When the appliance is installed at elevations above 4500 feet (1372 m), the certified high altitude rating shall be reduced at the rate of 4% for each additional 1000 feet (305 m).

14. MAKE SURE that the conversion label is installed on or close to the rating label to signify that the unit has been converted to a different fuel type.

Initial Installation

WARNING: Operation of this heater when not connected to a properly installed and maintained venting system can result in carbon monoxide (CO) poisoning and possible death.

Clearances to Combustibles:

Maintain sufficient clearances for operation, service and maintenance.

- A minimum distance of 21" (533 mm) is required from the centerline of the unit to the sidewalls.
- Minimum clearance for any combustible facing is 30" (762 mm) from the bottom of the unit.
- A 12" (305 mm) wide mantel can be mounted at a minimum height of 36" (914 mm) from the bottom of unit.
- No floor protection is required for any install height. However it is still recommended to use 12" of floor protection especially when carpet or linoleom flooring are used infront of the insert.
- Unit can be installed with combustible material underneath, as long as it is raised 2 ¼" off the floor.
- Minimum ceiling clearance is 54" from bottom of unit.

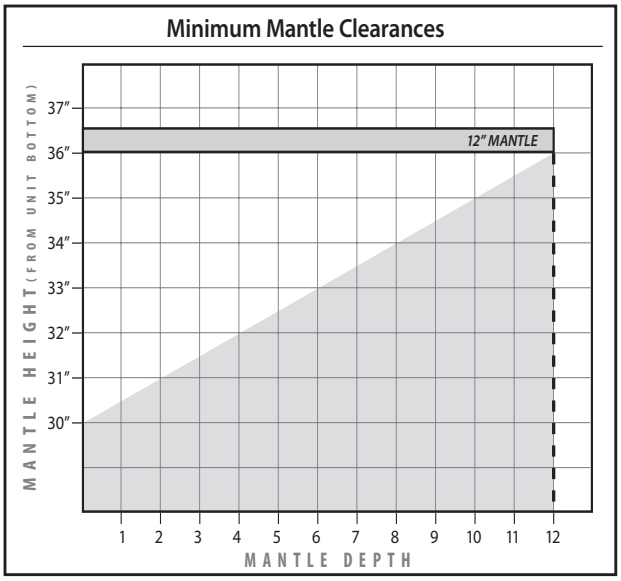

Figure 25: Mantle width and height.

Minimum Fireplace Size:

Table 4: Minimum dimensions of fireplace for E30 to be installed into.

	Width At Front	Width At Back	Height	Depth
Fireplace Dimensions	28" (711 mm)	18 1/2" (470 mm)	20" (508 mm)	16" (406 mm)

NOTE: Space must be provided for gas line on left side of unit for servicing purposes. The E30I can only be installed into masonary or zero-clearance fireplaces.

Non-Combustible Build Out:

The E30I may be installed and vented into any solid fuel fireplace that has been installed in accordance with the National, Provincial/State and local building codes and has been constructed of noncombustible materials. Before starting, refer to please reference the information in Table 5 and Figures 27 and 28. Additionally should extra installation depth be required, a build out may be constructed in front of the fireplace comprised completely of non-combustible framing and finishing material (see Figure 26). The construction of the build out must be sealed and the opening dimensions must follow the minimum height and front width (see Table 4) to prevent any direct heat transfer from the fireplace into the build out. The flex venting is permitted to have smooth sweeping, slight angle bends but must not be kinked in any way.

Initial Installation

QUALIFIED INSTALLERS ONLY

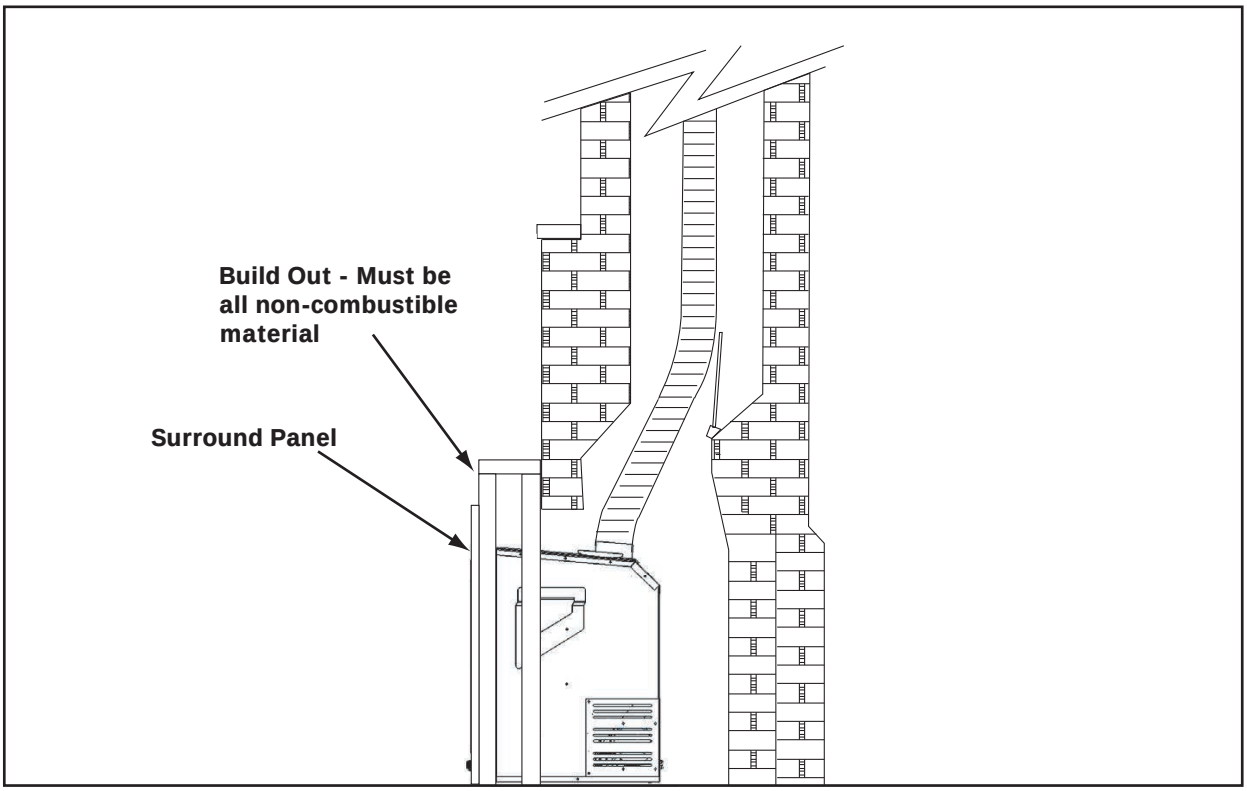

Figure 26: Installation with a non-combustible build out.

VENTING:

WARNING: This appliance has been designed to draw room air for proper heat circulation from the sides and bottom of the unit, and out the top front. Blocking or modifying these openings in any way can create hazardous situations.

The vent length for the fireplace must be between 8ft (2.44 m) and 30ft (9.14 m).

This model is vented with a 3" intake and a 3" exhaust aluminum or stainless steel flex vent leading into a vertical termination cap. The flue collars of this model will fit inside of a standard 3" vent and must be fastened directly to the vent with three screws.. The exhaust vent and air intake are both located on the top of the unit.

Check periodically that the vents are unrestricted. Also ensure that all direct vent pipes have been properly sealed and installed after routine inspection or cleaning. The air intake and exhaust pipes must be installed in the correct locations on the top of the fireplace.

Initial Installation

QUALIFIED INSTALLERS ONLY

The **ENVIRO** E30 may be installed and vented into any solid fuel fireplace that has been installed in accordance with the National, Provincial/State and local building codes and has been constructed of non-combustible materials. Before starting, refer to please reference the information in Table 5 and Figures 27 and 28

An approved chimney liner and rain cap must be used. A throat connector or flashing **must** be installed to ensure a tight seal, top performance, safety and efficiency. Carefully follow the manufacturer's instructions that accompany the chimney liner kit. Use double walled aluminum flex vent from either M&G DuraVent DirectVent Pro or ICC Excel Direct (see table 6). If necessary, remove the vent collar plate from the top of the insert and connect it securely to the liner with sheet metal screws.

Check for any tears in the liner at this point. IMPORTANT: The screws that hold the vent collar plate in its approved position must be installed.

NOTE: If the E30 unit is pulled out of its installation, and the vent air intake system is disconnected for any reason, ensure that the vent-air intake pipes are re-sealed with high-temperature sealant and reconnected with three (3) sheet metal screws evenly spaced.

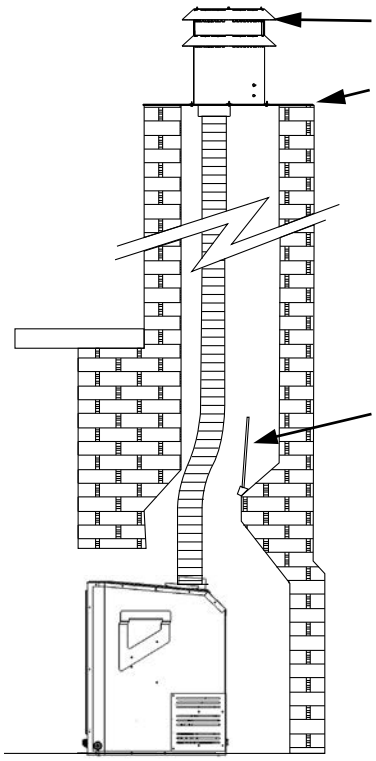

The height for the vent must be between 8 ft (2.44 m) and 30 ft (9.14 m).

Install a sealed vent cap to prevent leakage of room air up through chimney.

The intake and the exhaust are 3" (76mm).

Measure the height of the chimney beforehand and purchase the appropriate venting. Never attempt to over-stretch a flexible liner to accommodate the height of the chimney. Every joint in the venting must be secured with three (3) #8 x 3/8" HWH sheet metal screws and an appropriate sealant (either silicone or stove cement).

The flue damper can be fully blocked open or removed for installation of the unit; the smoke shelves, shields and baffles may be removed if attached by mechanical fasteners.

The fireplace and fireplace chimney must be clean, in good working order and constructed of non-combustible materials.

Make sure that all chimney cleanouts are tight fitting and will not permit air to leak into the chimney.

Refractory, glass doors, screen rails, screen mesh and log grates can be removed from the fireplace before installing the unit.

Figure 27: Installation of E30

Initial Installation

QUALIFIED INSTALLERS ONLY

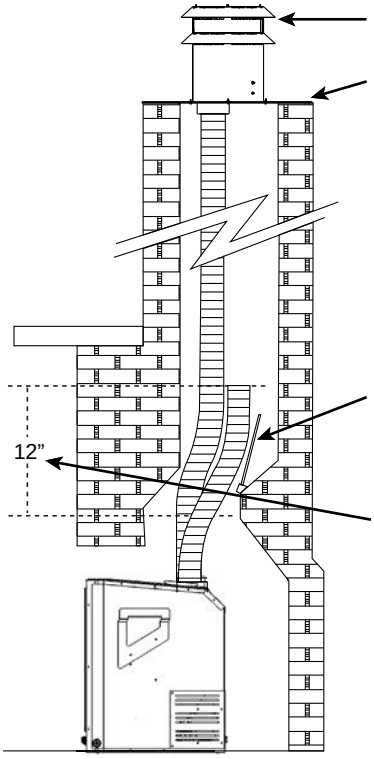

The height for the vent must be between 8 ft (2.44 m) and 30 ft (9.14 m).

Install a sealed vent cap to prevent leakage of room air up through chimney.

The intake and the exhaust are 3" (76mm).

Measure the height of the chimney beforehand and purchase the appropriate venting. Never attempt to over-stretch a flexible liner to accommodate the height of the chimney. Every joint in the venting must be secured with three (3) #8 x 3/8” HWH sheet metal screws and an appropriate sealant (either silicone or stove cement).

The flue damper must be fully blocked using a non-combustable seal off plate; the smoke shelves, shields and baffles may be removed if attached by mechanical fasteners.

The air intake liner must extend a minimum of 12” above the seal off plate. The exhaust liner must connect to the termination.

The fireplace and fireplace chimney must be clean, in good working order and constructed of non-combustible materials.

Make sure that all chimney cleanouts are tight fitting and will not permit air to leak into the chimney. It must be completely sealed.

This installation is not tested and is not covered by the certification of this appliance. Please contact authorities having jurisdiction in your area for restrictions

Figure 28: Alternate Installation of E30

Baffle Plate Adjustment:

This appliance comes equipped with an adjustable baffle plate that must remain closed when installation ulitilizes the minimum permissable length of vent (8’ / 2.44m). For venting lengths between 20’-30’ (6.1 m-9.1 m) it may be necessary to adjust the baffle plate, depending on installation and climate, to prevent flames from lifting/ghosting during start-up.

To adjust the baffle plate remove the door as shown in the Maintenance and Service - Glass Door Removal. Then, using a Torx T20 screwdriver, slightly loosen (DO NOT remove) the two baffle screws indicated below in figure 29. Slide the the plate down to open the baffle as needed (figure 30) then re-tighten the screws to set the plate position. If flames continue to lift re-adjust the plate and confirm venting, venturi setting, and log setup are all correct.

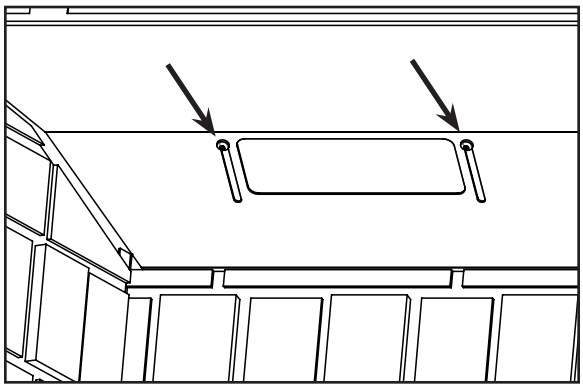

Figure 29: Baffle plate screws

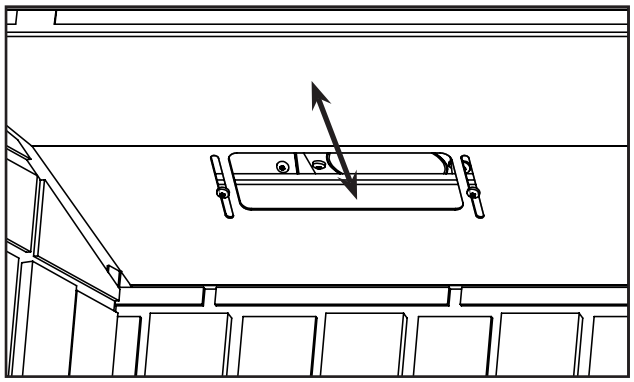

Figure 30: Baffle plate adjustment

Initial Installation

QUALIFIED INSTALLERS ONLY

Installing the Unit:

- Remove the packaging from the appliance and check to make sure there is no damage. Carefully check the glass door. Do not use the unit if it is damaged. In the event damage is found, please report it to your dealer as soon as possible.
- Carefully clean the fireplace and flue before installing the stove. Failure to do so may result in fumes or soot being blown into the room and may cause a fire leading to death or serious injury.

INSTALLATION INSTRUCTIONS:

1. Plan your installation and clearances to combustibles. The E30 may be installed and vented into any solid fuel fireplace that has been installed in accordance with the National, Provincial/State and local building codes and has been constructed of non-combustible materials. Also refer to the Also refer Clearances to Combustibles section.
2. Remove door. See Maintenance and Service - Glass Door Removal.

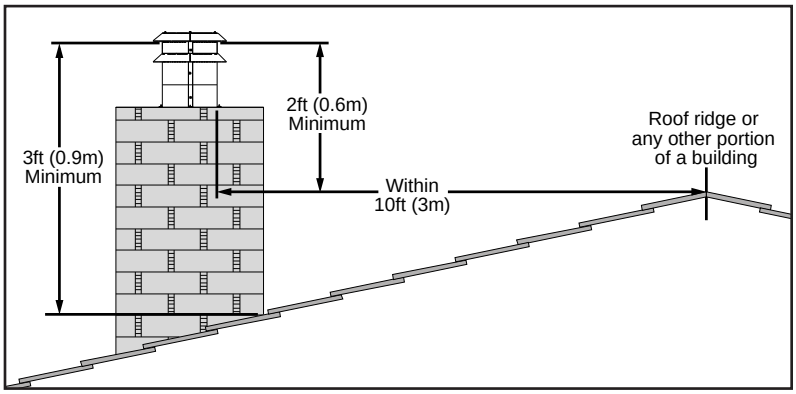

Figure 31: Roof Clearances.

3. Remove wrapping material from log and embers and check for any damage. If damage is observed, do not use unit and contact your local dealer.
4. Check that the chimney clean outs fit properly. The flue damper must be fully blocked open or removed for installation of the E30; the smoke shelves, shields and baffles may be removed if attached by mechanical fasteners.

Table 5: Vent termination clearances

Minimum Clearance*	Description
3 ft (0.9 m)	Clearance above the highest point where it passes through a roof surface, refer to Figure 29.
24 in (0.6 m)	Clearance above a roof ridge, any other portion of a building, or any other obstruction within a horizontal distance of 10 feet (3 m), refer to Figure 29.
5 ft (1.5 m)	Clearance for a vent or chimney above either the highest connected appliance drafthood outlet, or flue collar.
6 ft (1.83 m)	Clearance to mechanical air supply inlet.
3ft (0.9m)	Clearance to each side of center line extended above meter/regulator assembly.
6 ft (1.83 m)	Radial clearance around service regulator vent outlet.
12 in (30 cm)	Clearance above grade, verandah, porch, deck, or balcony.
3 ft (0.9 m)	Clearance to a building opening or combustion air inlet of another appliance, except with the approval of the authority having jurisdiction for the following reduced clearances.
9 in (0.23 m)	Exception for inputs up to and including 50,000 Btu/h (15kW)
12 in (0.3 m)	Exception for inputs exceeding 50,000 Btu/h (15kW) but not exceeding 100,000 Btu/h (30kW)

*Clearances are in accordance with local installation codes and the requiremenets of the gas supplier

QUALIFIED INSTALLERS ONLY

5. Stretch the Ø3" (76mm) flex vent liners to the length needed to ensure they can be easily connected to the vent terminals.
6. Install the flex pipe assembly up through the chimney, ensure that the pipe slides through far enough to connect onto the vent cap. Refer to table 6 to confirm the vent cap is approved for use.
7. Most vent caps can be installed onto chimneys with flue openings up to 16" (406mm) x 16" (406mm) when the actual flashing is 16" x 16" or larger. If the chimney is smaller, the flashing should be trimmed down and folded over.
8. Apply a bead of stove cement sealant to the Ø3" (76mm) pipe of the exhaust vent terminal. Slide the flex liner onto the vent terminal and secure with three (3) sheet metal screws evenly spaced.

	ICC EXCELDirect	M&G DirectVent Pro
Vertical Termination	TM-SVT*	46DVA-VCH*
	TM-IVT	
High-Wind Shield	TM-SVTS	46DVA-VWG
Flashing	TF-MFR	46DVA-GK
Co-Linear Adapter	TM-CTA	

**Requires co-linear adapter*

Table 6: Approved Terminations & other parts

9. Place a bead of high temperature silicone on the intake collar of the vent terminal. Slide the Ø3" (76mm) flex intake liner over the collar, secure the flex liner with three (3) sheet metal screws evenly spaced. Secure the vent terminal to the chimney using adequate sealant, and according to local building codes.
10. If the fireplace opening is lower than 24" (610 mm), remove the vent collar plate from the top of the insert by unscrewing the two (2) T-20 Torx screws located on the center top of the stove above the door opening (see Figure 32). Slide the collar plate backwards. Properly secure the vent collar plate to the flexible vent pipe liner(s) previously installed in the chimney. Be careful not to over-stretch the liner(s).
11. Apply a bead of stove cement sealant to the top section of the Ø3" (76mm) exhaust vent collar plate. Slide the Ø3" (76mm) flex vent over the flue collar and secure with three (3) sheet metal screws evenly spaced.
12. Place a bead of high temperature silicone on the intake collar of the fireplace, slide the Ø3" (76mm) flex intake liner over the collar, secure the flex liner with three (3) sheet metal screws evenly spaced.
13. Place the unit part way into the fireplace. Connect the gas line to the ⅜" NPT fitting on the right side of the unit using locally approved methods (see INITIAL INSTALLATION - GAS LINE CONNECTION). Route the power cord so it can be connected to the power supply.

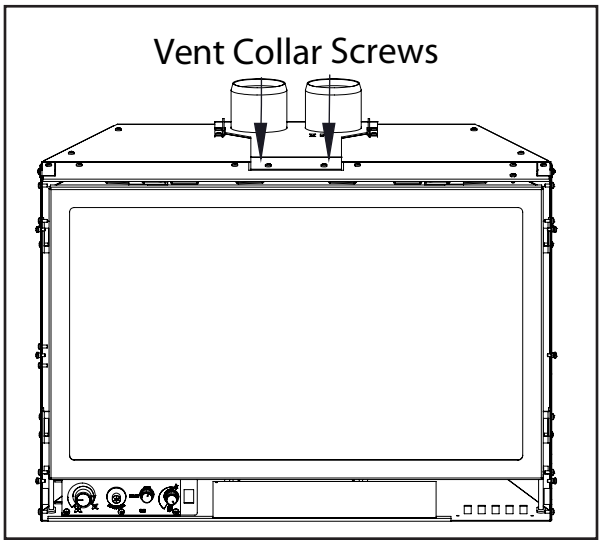

Figure 32: Vent Collar Plate Screw Location.

14. As you push the unit into its final position in the fireplace, if the vent collar plate was removed, reinstall it on the stove by pulling it into the brackets on top and reinstall the two Torx T-20 screws.

15. Adjust the levelling legs to ensure the unit is level and high enough if a base shelf and/or riser is to be installed. There are four levelling legs on the bottom of the unit (shown in Figure 33).

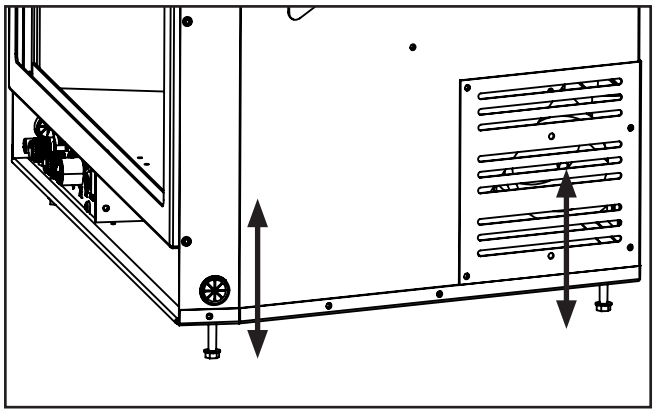

Figure 33: Levelling legs position.

ZERO CLEARANCE (ZC) FIREPLACE INSTALLATION:

The metal floor of the ZC solid fuel firebox can be removed to allow the installation of the insert. THE CLEARANCE TO COMBUSTIBLE MATERIAL UNDER THE INSERT IS 2 1/4" (57.2 mm). YOU MUST USE THE LEVELING LEGS TO RAISE THE INSERT A MINIMUM OF 2 1/4" (57.2 mm) IF THE UNIT IS TO BE INSTALLED ON COMBUSTIBLE MATERIAL. IF THE ZERO CLEARANCE FIREPLACE IS INSTALLED DIRECTLY ONTO A CONCRETE FLOOR THE MINIMUM CLEARANCE IS NOT APPLICABLE. The optional Base Shelf and Riser are recommended to fill the space under the unit once raised. The sidewalls and top structure of the solid fuel firebox cannot be altered with the exception of: removal of dampers, removal of smoke shelf or baffle, removal of ember catches, removal of log grate, removal of viewing screen/ curtain, and removal of doors. THE ORIGINAL FIREPLACE MAY NEVER BE RETURNED TO SOLID FUEL USE IN THIS CONDITION.

IMPORTANT: If the factory-built fireplace has no gas access hole(s) provided, an access hole of 1.5 inch (37.5 mm) or less may be drilled through the lower sides or bottom of the firebox in a proper workmanship like manner. This access hole must be plugged with non-combustible insulation after the gas supply line has been installed. Cutting any sheet-metal parts of the fireplace, in which the gas fireplace insert is to be installed, except as tested for the floor is prohibited.

The included label plate shown below must be permanently attached inside the cavity of the fireplace in a visible location.

WARNING: This fireplace has been converted for the use with a gas fireplace insert only and cannot be used for burning wood or solid fuels unless all original parts have been replaced, and the fireplace re-approved by the authority having jurisdiction.

C-11168

Figure 34: Fireplace Altered Plate.

Initial Installation

QUALIFIED INSTALLERS ONLY

Electrical Requirements:

The fireplace must be electrically connected and grounded in accordance with local codes or, in the absence of local codes, with the current CSA C22.1 Canadian Electrical Code Part 1, Safety Standards For Electrical Installations, or The National Electrical Code ANSI / NFPA 70 in the US.

WARNING: The electrical grounding instructions must be followed. The unit is equipped with a three-prong (grounding) plug for your protection against shock hazard, and should be plugged directly into a properly grounded three-prong outlet. DO NOT cut or remove the grounding prong from this plug.

CAUTION: When servicing controls, label all wires prior to disconnection. Wiring errors can cause improper and dangerous operation. Verify proper operation after servicing. If any of the original wire as supplied with the appliance must be replaced, it must be replaced with 18 AWG wire with a temperature rating of at least 105°C.

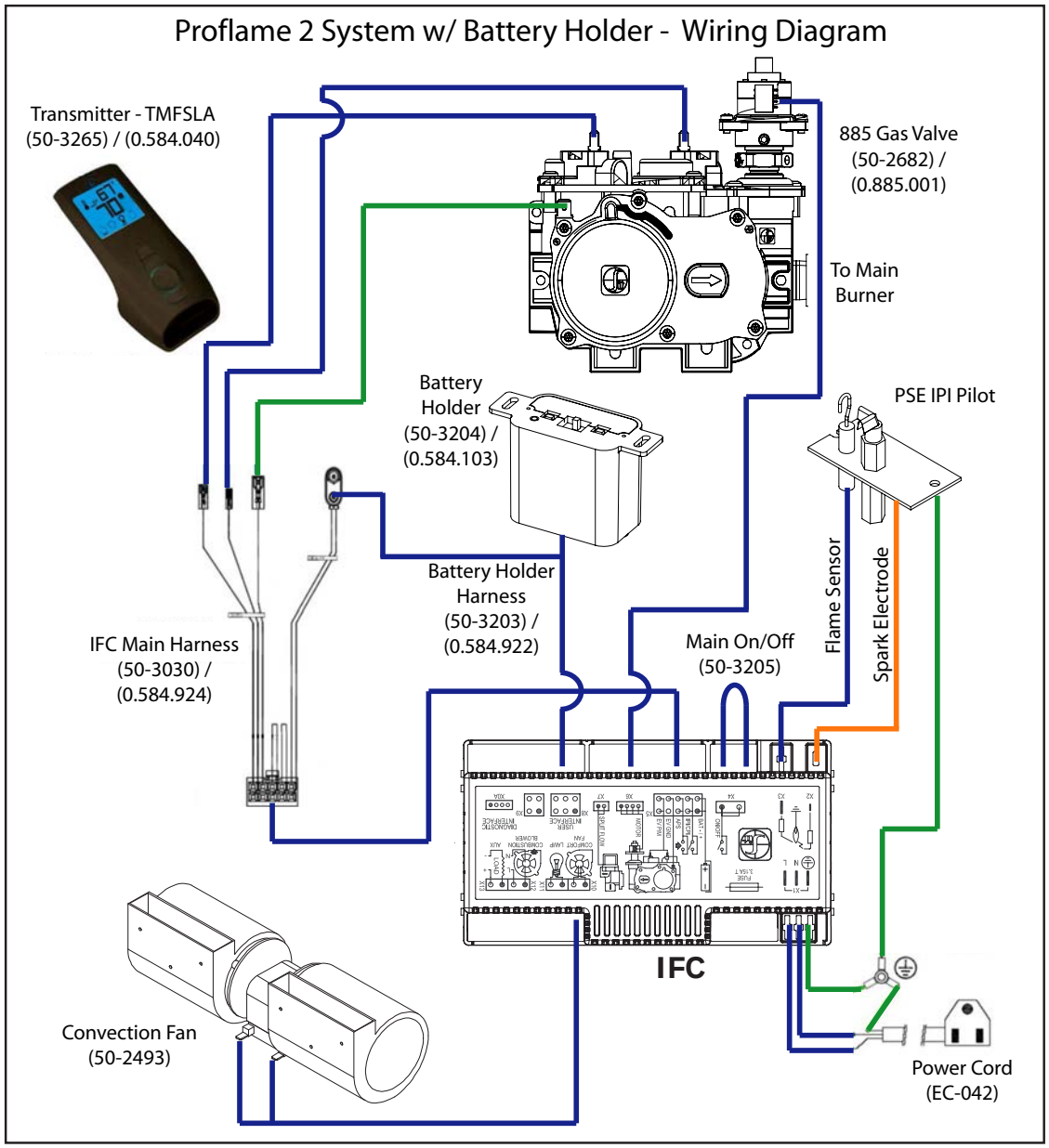

Figure 35: Wiring Diagram.

Initial Installation

QUALIFIED INSTALLERS ONLY

Gas Line Connection:

WARNING: Only persons licensed to work with gas piping may make the necessary gas connections to this appliance.

Gas Line Connection:

• A ⅜" NPT male pipe nipple (supplied with the unit) will have to be turned into the valve at the lower left side rear of this fireplace (see Figures 36 and 37). Consult the local authorities for local codes or use the CAN/CGA B149 (1 or 2) installation code in Canada. In the US, gas installations follow either local codes or the current edition of the National Fuel Gas Code ANSI Z223.1.

• If the factory-built fireplace has no gas access hole(s) provided, an access hole of 1.5 in (37.5mm) or less may be drilled through the lower sides or bottom of the firebox in a proper workmanship like manner. This access hole must be plugged with non-combustible insulation after the gas supply line has been installed.

• A shut-off valve is not supplied with this unit but one should be installed.

• The appliance and its shut-off valves must be disconnected from the gas supply piping system during any pressure testing where the pressure **exceeds** ½ psig (3.45 KPa) or the valve will be damaged.

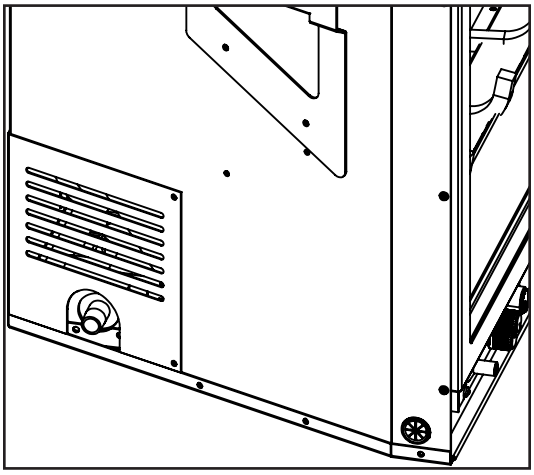

Figure 36: ⅜" NPT Male Pipe Nipple with Cover Attached.

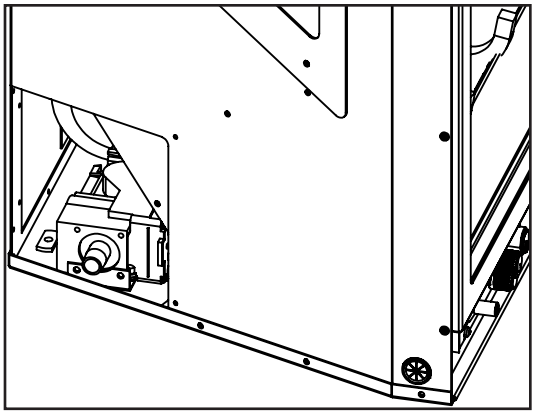

Figure 37: ⅜" NPT Male Pipe Nipple with Cover Removed.

Table 7: Orifice and Pressure Information.

E30 with Log Set

Main Burner	Natural Gas	Propane Gas
Orifice:	#37 DMS	#52 DMS
Max. Manifold Press:	3.8 W.C. (0.95 KPa)	11.0 W.C. (2.74 KPa)
Min. Manifold Press:	1.2 W.C. (0.30 KPa)	2.7 W.C. (0.67 KPa)
Max. Supply Press:	10.5 W.C. (2.62 KPa)	13.0 W.C. (3.24 KPa
Min. Supply Press:	5.0 W.C. (1.24 KPa)	11.0 W.C. (2.74 KPa)
Max. Input:	33,000 BTU/hr (9.67 KW)	30,000 BTU/hr (8.79 KW)
Min. Input:	16,500 BTU/hr (4.84 KW)	15,000 BTU/hr (4.4 KW)

QUALIFIED INSTALLERS ONLY

TO TEST VALVE PRESSURES (INPUT RATES):

The pressure taps are located on the front side of the valve (see Figure 38).

1. Using a long flat bladed screwdriver, turn set screw one (1) turn counter-clockwise to loosen.
2. Place $^{5}/_{16}$ in (8 mm) I.D. hose over the pressure taps.
3. Check pressures using a manometer.
4. When finished, remove hose and tighten set screw.

Always check for gas leaks with a soap and water solution after completing the required pressure test.

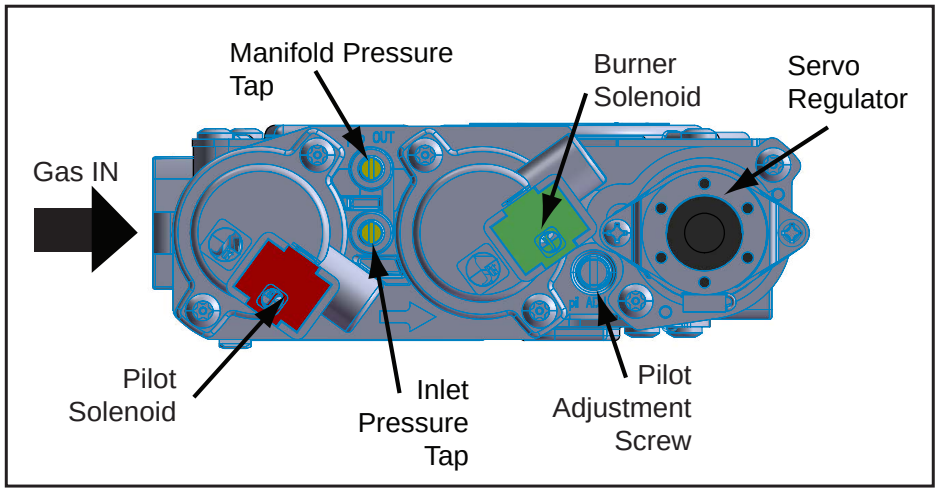

Figure 38: Valve Details.

NEVER USE AN OPEN FLAME FOR LEAK TESTING.

ADJUSTING THE PILOT FLAME:

The pilot flow adjustment is set to maximum at the factory and should not need to be adjusted. The pilot flame should envelope ⅜" to ½" (10 to 13mm) of the Flame sensor (see Figure 39). However, should the need arise, follow Steps 1- 2 below.

1. The adjustment screw can be reached through the front of the unit using a 10 inch long blade head screw driver (see Figure 38 for location on valve).
2. Turn the adjustment screw clockwise to decrease or counterclockwise to increase pilot flame.

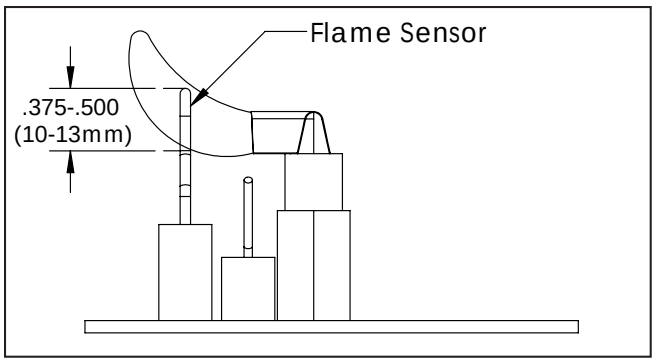

Figure 39: Proper Pilot Flame.

Secondary Installation

Safety Screen Installation / Removal:

To install the safety screen hold it upright in front of the fireplace with four (4) hooks pointing towards the fireplace. Slide the hooks into the corresponding brackets on each side of the cabinet (see figures 40 and 41). Ensure the hooks are secure to confirm correct installation. To remove the safety screen unhook it from the brackets by liffting up and out.

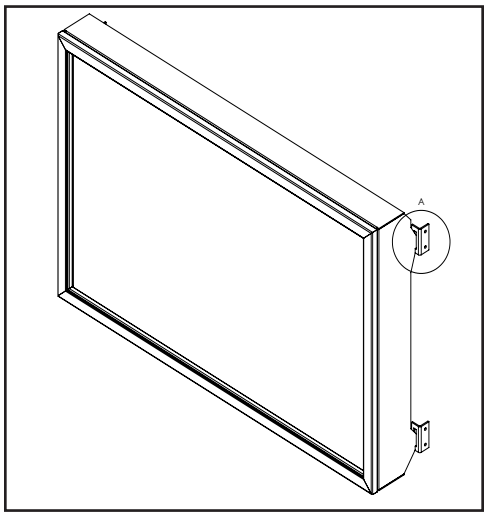

Figure 40: Installing Safety Screen onto Cabinet Bracket (Parts removed for clarity)

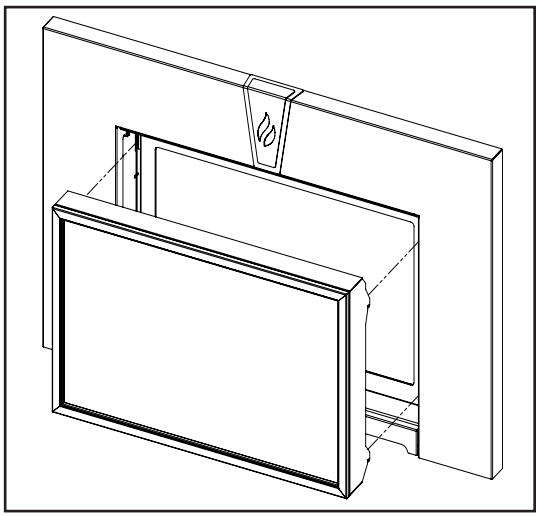

Figure 41: Installing Safety Screen onto Cabinet Brackets

Optional Base Shelf & Riser:

The E30 Base Shelf (1⅝" (41 mm) high) and Base Shelf Riser (2⅛" (54 mm) high) are components that can be combined to create a riser with an overall height of $2^{3}/_{16}$" (55 mm). This shelf can be installed with or without the riser and can be used when the hearth in front of the unit is lower than the fireplace opening. Additional Base Shelf Risers can be fastened together to increase the height in increments of 2⅛" (54 mm). This Base Shelf may be used in conjunction with the any of the E30 surround panel options, and it may also be used with the E30 Trimmable Surround. The Base Shelf and Riser are sold separately.

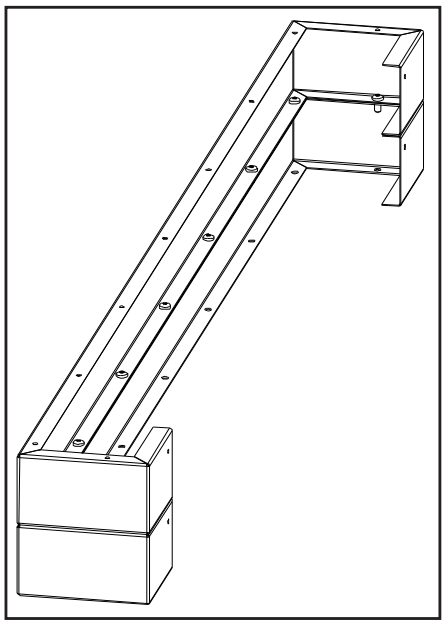

Figure 42: Combining 2 Base Shelf Riser.

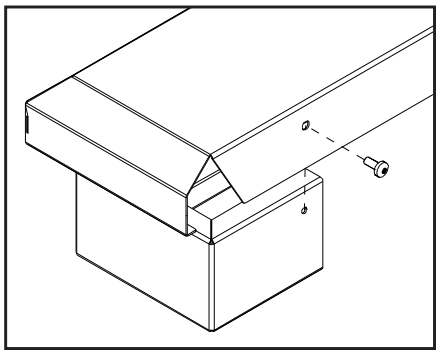

Figure 43: Installing Base Shelf onto Riser.

Installation:

1. If unit is running, turn it off and allow it to cool completely.
2. When using more than one riser each level must be attached using nine (9) #8 T-20 screws provided (see Figure 42).
3. If installing with riser(s) the Base Shelf is to be fastened to the riser(s) with one T-20 screw at each end of the back (see Figure 43).
4. The leveling legs on the E30 may need to be adjusted to match the height of the riser and shelf.
5. Center the Base Shelf assembly in front of the unit flush with the bottom of the unit.
6. Install surround if required.

Optional 3 and 4 Sided Trimmable Panels:

Modifying the Surround Panel:

The E30 Trimmable Surround Panels are large rectangular panels that may be cut for use in cases that a non-standard fireplace opening (e.g. an arched opening) is to be filled. Optionally this surround can be left uncut and placed in front of the fireplace opening.

1. Measure the fireplace opening and/or make a template of the fireplace opening.

2. Transfer the measurement to the Trimmable Surround.

3. If desired, offset the measurements by approximately 1/8" (3mm) to the inside; this will allow for the panel to be placed just inside the fireplace opening for a cleaner appearance.

4. Cut along the preferred line (from direct measurements of offset) and remove any sharp edges.

5. The panel can be touched up with a high temperature metallic black paint available from your dealer.

Panel Installation:

1. Install the two Trimmable Panel brackets onto the E30 unit using a T-20 Torx screwdriver. See Figures 44 and 45 for the screw installation locations. There are three sets of hole patterns on the brackets depending on which Surround Panel is being installed. See Figures 46-48.

NOTE: The Extruded and Contemporary Surround Panels use the same holes for mounting the Side Cabinet Extensions. The Regular Surround Panel uses its own set of holes.

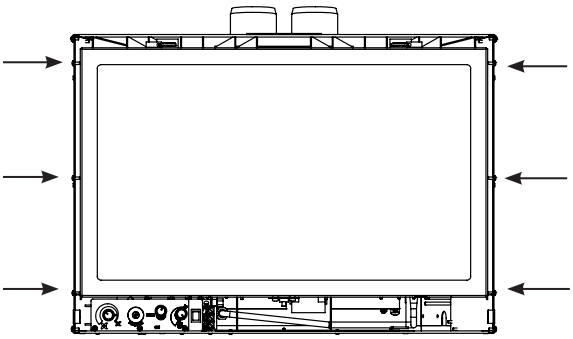

Figure 44: Screw Installation Locations.

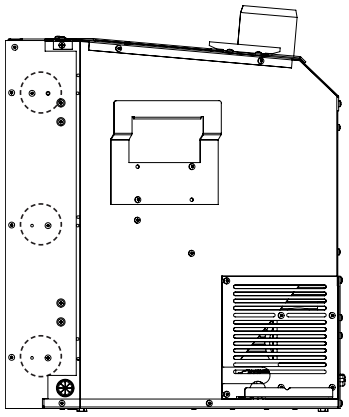

Figure 45: Screw Installation Locations.

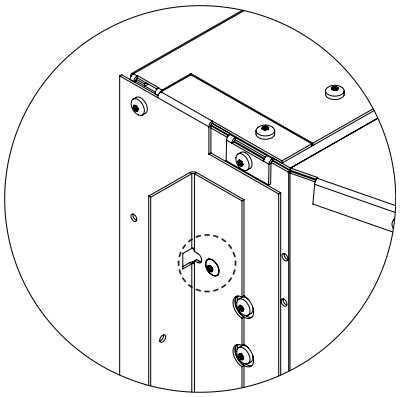

Figure 46: Installation for Contemporary and Extruded Surround.

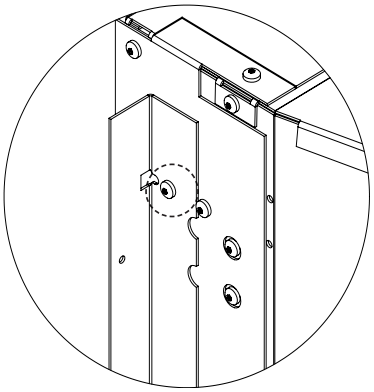

Figure 47: Installation for Regular Surround.

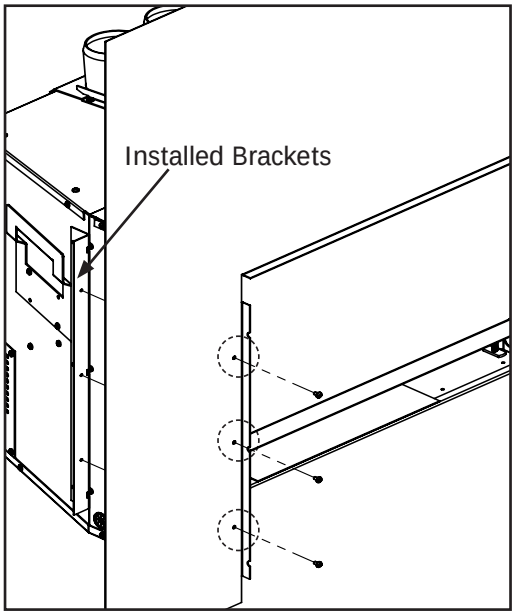

Figure 48: Screw Installation Locations.

Secondary Installation

Surround Panel Installation:

WARNING: The surround becomes hot when the unit is operating; ensure that the unit is turned off, and that it has cooled to room temperature before beginning this installation.

	Height	Width
3-Sided Surround	25” (635 mm)	39 7/8” (1013 mm)
4-Sided Surround	31 1/2” (800 mm)	39 7/8” (1013 mm)

Table 8: Surround Dimensions.

Please check components supplied with this kit. If components are missing or have been damaged, contact your dealer, distributor or courier company before starting this installation.

IMPORTANT: The panel must not seal ventilation openings in the fireplace.

INSTALLATION (3 and 4 sided Surrounds):

NOTE - 2021 E30 models will require removal of the surround panel access door (if applicable) prior to installation

Lift the face upright in front of the fireplace with the six hooks pointing towards the fireplace. Slide the hooks over their corresponding screws (see Figures 49 & 50). Ensure the hooks are secure before releasing the surround. The surround should be wiped with a damp cloth periodically. Screws can be tightened for a more permanent install.

REMOVAL:

Lift the surround straight up in order to unhook the notch on the hooks from the screws. Pull the surround away from the fireplace. Place the surround where it will not be damaged.

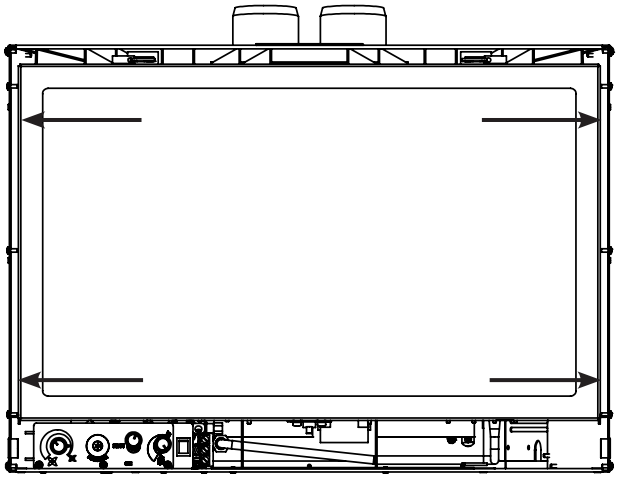

Figure 49: Screw Locations.

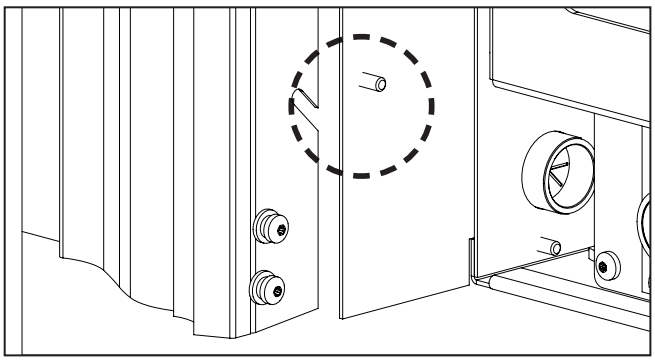

Figure 50: Screw and Hook Close-Up.

Burner Switch Blank INSTALLATION:

The burner switch supplied with the surround comes pre-installed and wired. This fireplace doesn’t require a burner switch and it can be removed from the surround. Use the black switch blank supplied with the fireplace manual to fill the hole in the surround panel where burner switch was for a cleaner appearance.

CLEANING: NEVER CLEAN FACES WHEN THEY ARE HOT. Turn off fireplace and allow to fully cool.

Painted surfaces should be periodically wiped with a damp cloth. Plated surfaces mut be free of fingerprints and smudges prior to installation and should be cleaned with a clean soft rag and a small amount of Isopropyl alcohol.

Firebox Liner and Burner Tube Removal:

NOTE: The firebox liners are fragile and should be handled gently.

1. **Ensure the E30 is turned off and allow the unit to cool.**
2. Remove the glass door as shown in the Maintenance and Service - Glass Door Removal.

WARNING: Do not touch or attempt to remove the glass if the fireplace is not completely cool. **Never operate the fireplace with the glass removed.**

3. Remove the log set and all ember material (if installed).
4. Use the following steps to remove the liners and the burner tube.

NOTE: Follow the steps in the reverse order for reassembly.



Figure 51: The firebox with log set and media removed.



Figure 52: Carefully remove the front liner (if installed) on the bottom of the firebox by picking it up gently.

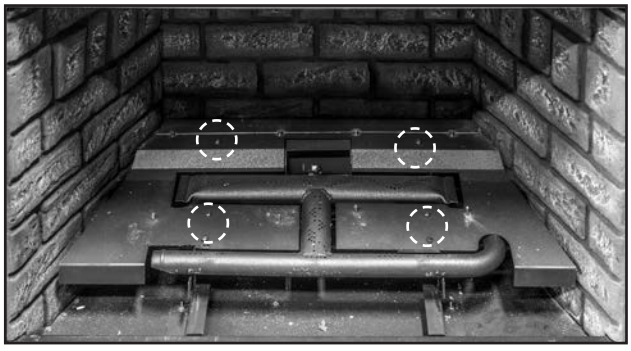

Figure 53: The log grate is removed next by simply lifting it off the grate tabs.

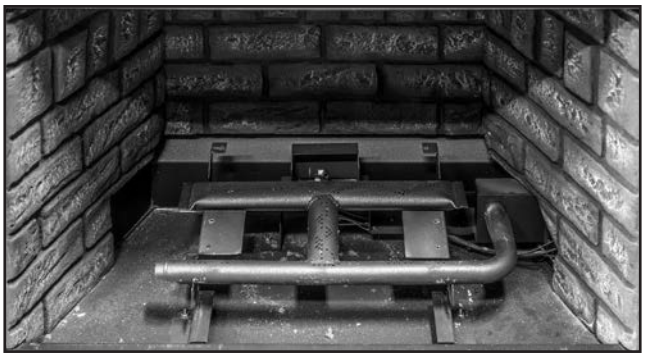

Figure 54: Remove the 6 screws highlighted in figure 53 using a Torx T-20 screwdriver and remove the air deflector



Figure 55: Lift the burner off the mounts and pull it out of the inlet box. The unscrew the panel brackets (T20's) from each side of the baffle to remove the left and right side liners.

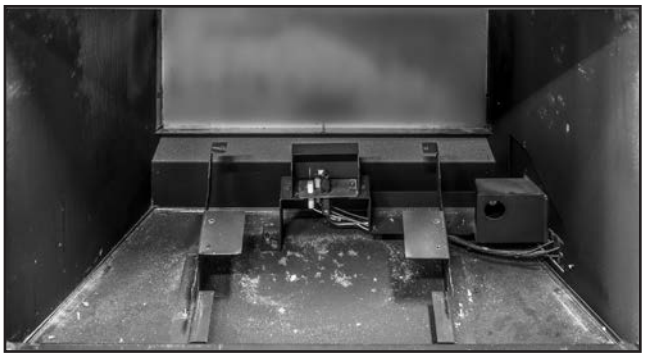

Figure 56: The rear liner can now be removed. Use a vacuum to clean up the bare firebox if needed.

Secondary Installation

Log Set and Ember Installation (Traditional & Birch):

NOTE: The logs are fragile and should be handled gently. WARNING: Failure to position the parts in accordance with these diagrams or failure to use only parts specifically approved with this appliance may result in property damage or personal injury. The underside of the logs are contoured and some contain pin holes to make alignment easier. Using the pictures provided, carefully set the logs in place (see Figures 57 through 67).

Figure 57: Unwrap the log grate and painted front blocker from the foam packaging. The front blocker **MUST be installed BEHIND the log grate**. The front blocker uses the same mounting points as the log grate.

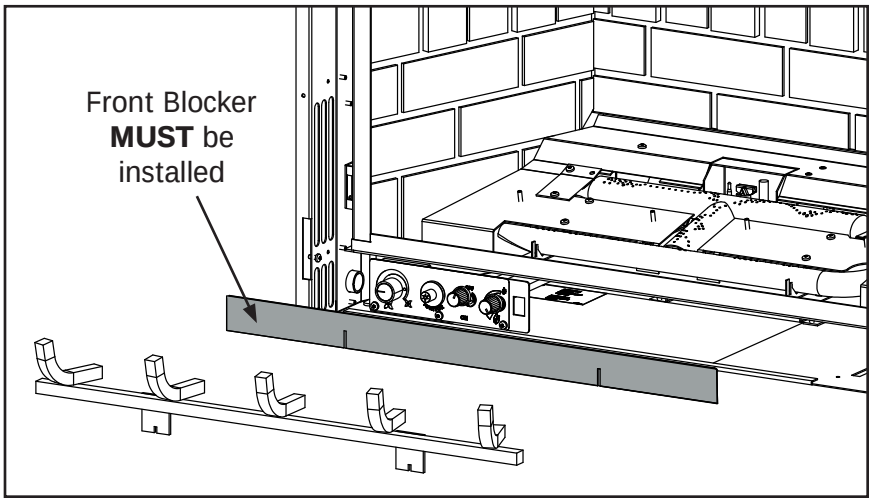



Figure 58: Install the **back log** on top of the pilot on the back shelf of the air deflector. Push it against the back brick panel.

Figure 59: Place both the **left and right mid logs** in the middle of the air deflector. Make sure the bottom holes align with the pins in the air deflector.



Figure 60: Place the **left top log** on the right, on top of the rear log and left mid log. Locate the bottom on the far left grate arm.





Figure 61: Install the **right top log** on top of rear log and right mid log. Locate the bottom on the far right grate arm.

Figure 62: Pull apart Embaglow and spread a thin even layer over the burner area. Brush the ember wool as fine as possible (clump the wool together and separate it using the supplied brush) over the burner tube. Place **coals** on the air deflector in front of both mid logs as shown. **Do Not** cover the gaps between the burner and air deflector.

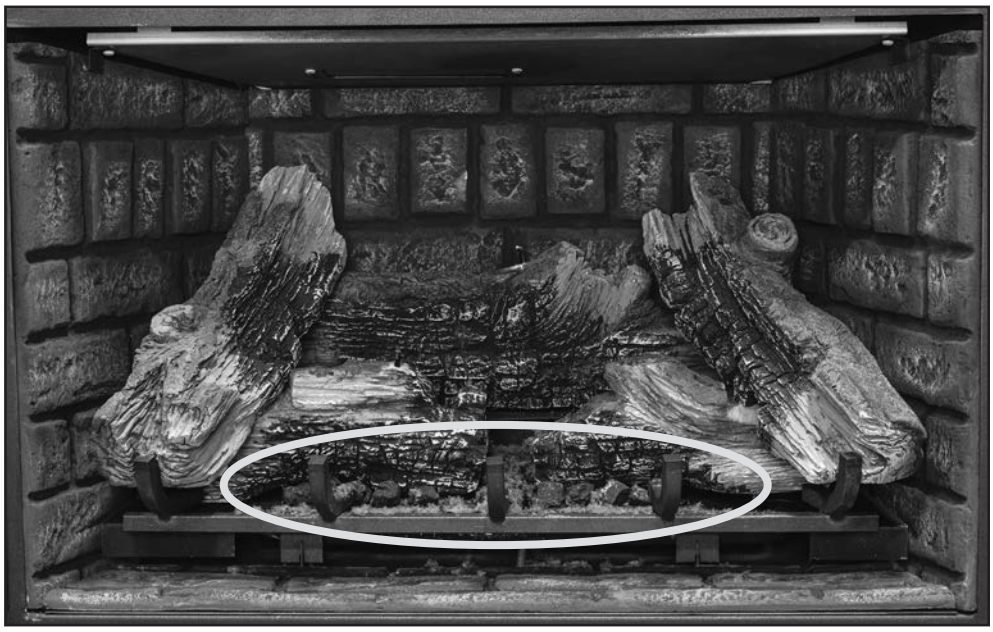

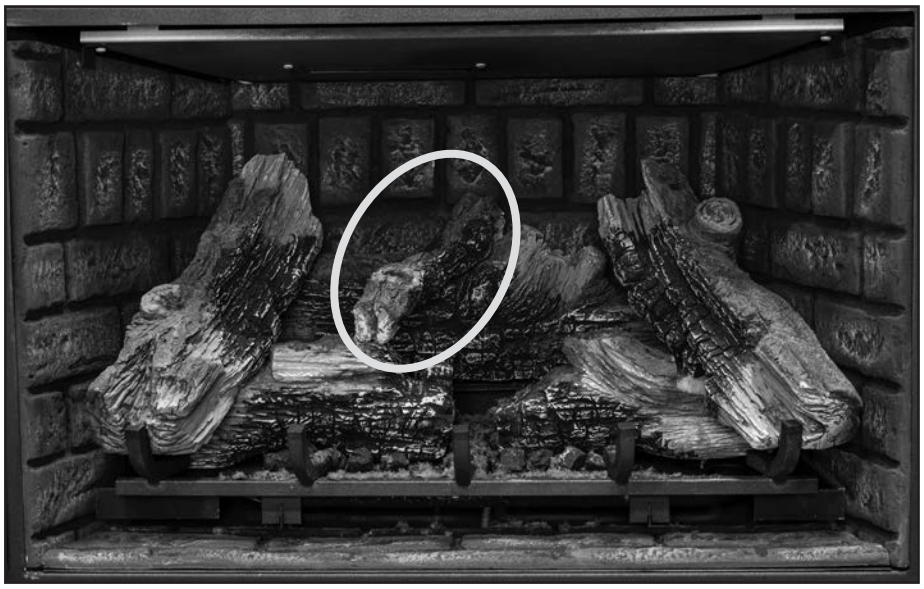

Figure 63: Place the **center top crossver log** at an angle on top of the rear log and left mid log pins



Figure 64: Rest the **center top log** on top of the left mid log making sure to align the bottom with grate arm.



Figure 65: Place the **center front chunk log** on the log grate, close to the center, with the front edge resting on the right mid log.

Note: There are 2 locating notches on the bottom side.

Bottom Notch = E30

Top Notch = E33

Secondary Installation



Figure 66: Finally, rest the l**eft and right front chunks** on the log grate and burner as shown.

DO NOT cover any burner ports

TIP: While the glass is still removed, it is recommended that the gas line be purged by lighting the pilot.



Figure 67: Proper installation and flame appearance

Log setup is now complete. Re-install the firebox door, then the safety screen.

Run the unit for 15 minutes then adjust the venturi as needed using the door tool. Figure 67 above depicts what the burn and flame appearance shoud look like when the log set is properly installed and venturi adjusted.

When re-lighting the fireplace for the first time since the log set has been installed/replaced, watch for ignition at ALL the burner ports. If a long delay is noticed, turn the appliance off and wait for it to cool down. Then remove the glass and make sure none of the burner ports are blocked.

Maintenance: Once a year, the logs should be removed and checked for deterioration or large amounts of soot. A small amount on the bottom side of the logs is normal. Remove and replace the logs in the same manner described above.

If new logs are required, contact your nearest ENVIRO dealer.

Never operate the fireplace with the glass door removed.

DIAGNOSTIC FLASH CODES:

[1]. Fail to ignite: If there is no positive ignition, the board will go into lock out and the LED will blink [3] times in intervals until the system is reset.

[2]. Low battery condition (<[4]V): the LED indicator will blink one ([1]) time in intervals.

[3]. Parasitic Pilot Flame: the LED indicator will blink two ([2]) times in intervals.

[4]. System Lock out: the LED indicator will blink three ([3]) times in intervals.

Additional Ignition Information

[1]. The Proflame[2] IFC will try two ([2]) times for ignition.

[2]. Each try for ignition will last approximately [60] seconds.

[3]. The wait time between the two tries is approximately [35] seconds.

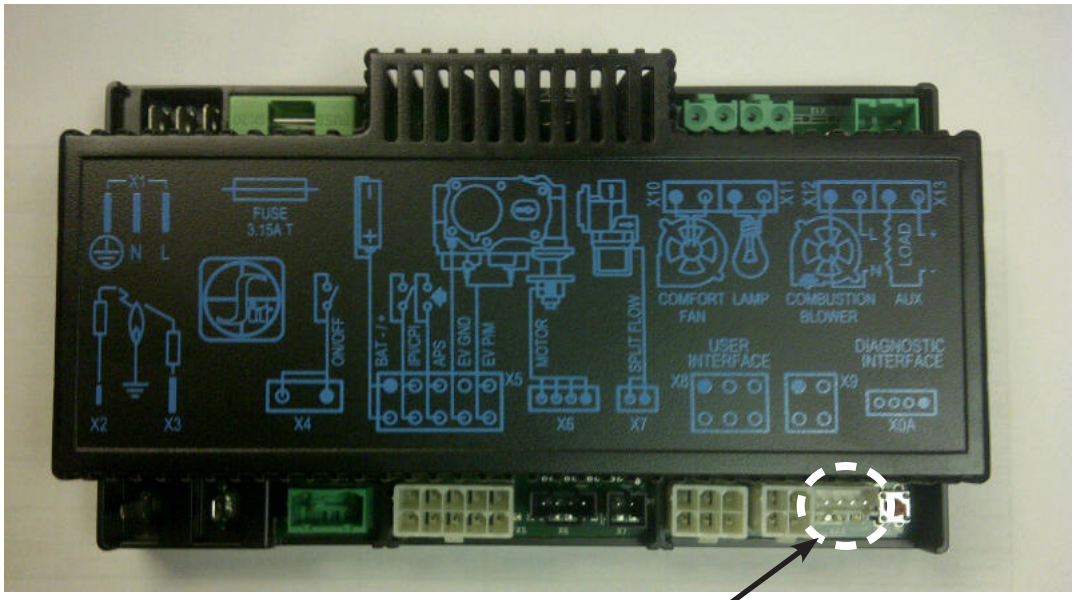

Figure 68: IFC LED Location

Troubleshooting

Problem	Possible Cause	Solution
Thermostat does not work	The pilot flame has gone out	· Turn it ON
	The On/Off switch is turn to OFF	
	The thermostat is set too high	· Set the thermostat to a lower temperature
No spark generation	Spark developes near the pilot assembly or could occur onboard	· Check pilot assembly wiring
		· Check for broken or poor connection from the sparker to the electrode
		· Check for the spark shorting or arcing at other locations
		· Check for defective sparker and spark electrode
No pilot flame ignition	No spark from the igniter	· See “no spark generation”
	Air in the gas line	· It takes a while for all the air to purge out of the pilot before gas can reach the pilot and ignite
	Pilot gas pressure dropout upon main burner gas valve opening	· Check gas mains supply and pressure
	No gas flow out of the pilot burner	· Check gas valve wirings and connections to the board
		· Check the pilot burner for obstruction
		· Check the wirings and connections between the pilot assembly and the board
		· Check the correct gas type settings on the valve and pilot burner assembly orifice
Pilot will not remain lit	7-Days of burner inactivity.	• The pilot will automatically turn off when the burner has not been used for 7 consecutive days. Re-light pilot to reset the counter.
	Problem with Flame Sensor circuit	· Check for proper connection of the Flame Sensor to the IFC board
		· Check pilot for full flame impingement around Flame Sensor
		· If flame is too small, check gas pressure, adjust pilot rate screw, check pilot head for damage
		· Ensure the ground wire is properly attached to the pilot mounting bracket and that it is makes a good electrical connection.
Remote control does not work	The pilot light has gone out	· See “Pilot will not remain lit”
	The remote is too far away from the heater	· Use the remote closer to the heater
	The battery holder is turned “OFF”	· Check the remote control instructions
	One of the two remote control or battery holder batteries are dead	· Replace the batteries
No reaction to command	Battery holder or transmitter batteries are low	· Replace the batteries
	A maximum number of failed ignitions or flame restorations have been reached.	· Remove any possible blocking conditions. See “locking conditions”
		· See how to reset the board from Lockout
	No communication between the remote control and the IFC	· Reprogram the transmitter to the battery holder.
		· Follow the initializing system for the first time

Troubleshooting

Problem	Possible Cause	Solution
Locking conditions	Reset the Proflame IFC board	· Turn the system off by pressing the ON/OFF button on the transmitter
		· After approximately 2 seconds press the ON/OFF button on the transmitter again.
		· In the manual flame control mode, use the down arrow button to reduce the flame to off, indicated by the word OFF displayed on the transmitter LCD screen.
		· Wait approximately 2 seconds and press the up arrow button, the ignition sequence will start.
		· With the transmitter off, move the slider switch on the battery holder to the OFF position.
		· Wait approximately 2 seconds and move the battery holder slider switch to the ON position.
Main burners will not start	The pilot flame has gone out	· See “Pilot will not remain lit”
	The remote control is not working correctly	· Replace the batteries
	The thermostat is disconnected or set too high	· Set the thermostat to a lower temperature
Flame lifting	Leak in vent pipe	· Check for leaks in vent connections
	Improper vent configuration	· Check vent configuration with manual · Check positioning of baffle plate
	Terminal may be re-circulating flue gases	· Check to see if terminal is on correctly
		· May need to install high wind termination cap.
		· Contact dealer
Blue Flames	The heater has just been started	· Normal during start up: flame will yellow as the fireplace heats up
	Improper air shutter adjustment	· Decrease primary air by closing the air shutter
Glass fogs up	Normal condition: after the appliance warms up the glass will be clear.	**Due to additives in gas, glass may get hazy during operation** Clean as needed.
Flames are burning “dirty” or sooting	The logs or glasses are placed incorrectly	· Check log positioning
		· Check level of glasses layout
	Improper air shutter adjustment	· Increase primary air by opening the air shutter
		· Check for proper venting and blockage of the vent termination
		· See also “Burners will not remain lit”
	Incorrect rating input	· Check manifold pressure and clock input rating for over-firing · Confirm orifice size is correct

Parts List

Reference Number	Part Description	Part Number
1	E30 DV Flue Adaptor Bottom Gasket	50-2497
-	E30I Owner's Manual	50-2597
-	IPI LP Conversion Stepper Motor Only	50-3753
-	E30I Conversion Kit LP to NG	50-2541
-	IPI NG Conversion Stepper Motor Only	50-3870
2	E30 Door Release Tool	50-2510
-	Ceramic Wool Embers Only	50-893
3	Domestic Power Cord (115V)	EC-042
4	Heyco Strain Relief	EC-044
5	E30 Pilot Shield	50-2500
6	Pilot Gasket	EC-021
7	PSE IPI Pilot Assembly (2021)	50-4058
-	IPI LP Pilot Orifice (2021)	50-4080
8	E30/E33 H-Burner Tube	50-3653
9	E30 Valve Cover with Gasket	50-2503
10	885 Proflame IPI Valve NG	50-2682
11	Proflame 2 Battery Holder (0.584.103)	50-3204
-	Battery Holder Wire Harness (0.584.922)	50-3203
12	Proflame 2 IFC	50-3791
-	IFC Wire Harness (0.584.924)	50-3030
-	IFC ON/OFF Jumper Only	50-3205
13	Proflame 2 Transmitter (TMFSLA)	50-3265
14	E30 Door Complete	50-2505
15	E30 Glass C/W Gasket (21.75" X 13.575")	50-2506
16	Dual Bulb Door Gasket (10ft)	50-634
17	E30 Replacement Safety Screen (2021)	50-4089
18	Convection Fan Only	50-2493
19	E30 Door Latch Mechanism (Set of 2)	50-2507
20	Brick Liner Set - E30	50-2509
-	Porcelain Liner Set - E30	50-2427
-	E30/E33 Traditional Logset (10 pcs)	50-3627
-	E30/E33 Birch Logset (10 pcs)	50-3628
-	12 oz. Can of Metallic Black Touch Up Paint	PAINT-12-MB

Parts Diagram - Components

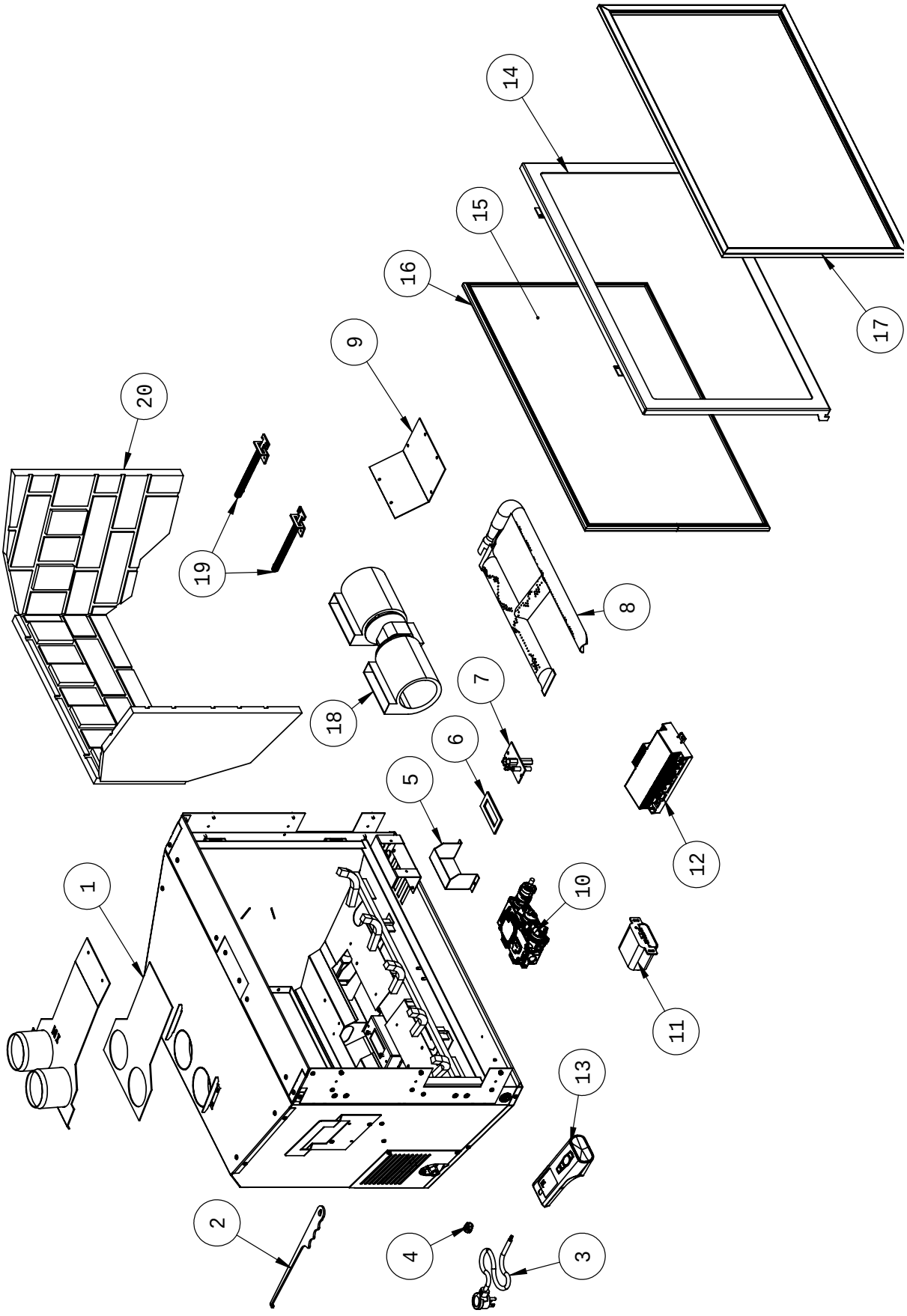

Warranty for Enviro **Gas** Products

Sherwood Industries Ltd. ("Sherwood") hereby warrants, subject to the terms and conditions herein set forth, this product against defects in material and workmanship during the specified warranty period starting from the date of original purchase at retail. In the event of a defect of material or workmanship during the specified warranty period, Sherwood reserves the right to make repairs or to assess the replacement of a defective product at Sherwood's factory. The shipping costs are to be paid by the consumer. All warranties by Sherwood are set forth herein and no claim shall be made against Sherwood on any oral warranty or representation.

Conditions

- A completed warranty registration must be submitted to Sherwood within 90 days of original purchase via the online warranty registration page or via the mail-in warranty registration card provided. Have the installer fill in the installation data sheet in the back of the manual for warranty and future reference.
- This warranty applies only to the original owner in the original location from date of install.
- The unit must have been properly installed by a qualified technician or installer, and must meet all local and national building code requirements.
- The warranty does not cover removal and re-installation costs.
- Sherwood Industries Ltd. reserves the right to make changes without notice.
- Sherwood Industries Ltd. and its employees or representatives will not assume any damages, either directly or indirectly caused by improper usage, operation, installation, servicing or maintenance of this appliance.
- A proof of original purchase must be provided by you or the dealer including serial number.
- This warranty does not cover any discoloration of the safety screen mesh.

Exclusions

An expanded list of exclusions is available at www.enviro.com/help/warranty.html

This warranty does not cover:

- Damage as a result of improper usage or abuse.
- Damage caused from over-firing due to incorrect setup or tampering.
- Damage caused by incorrect installation.

To the Dealer

- Provide name, address and telephone number of purchaser and date of purchase.
- Provide date of purchase. Name of installer and dealer. Serial number of the appliance. Nature of complaint, defects or malfunction, description and part # of any parts replaced.
- Pictures or return of damaged or defective product may be required.

To the Distributor

- Sign and verify that work and information are correct.

Sherwood Industries Ltd.
6782 Oldfield Road, Victoria, BC . Canada V8M 2A3
Online warranty registration: www.enviro.com/warranty/

Category	One Year	Two Year	Limited Lifetime (7yr)
Parts [1,2] (unit serial number required)		✔	
Firebox Liner Panels [3]		✔	
Firebox			✔
Heat Exchanger			✔
Burner			✔
Ceramic Logs [4]			✔
Ceramic Glass [5]	✔		
Pedestal / Legs (excluding finish)			✔
Door Assembly			✔
Surround Panels (excluding finish)			✔
Exterior Panels (excluding finish)			Up to 5 years
Electrical Components		✔	
Exterior Surface Finishing	✔		
Labour	✔		

[1] Whereas warranty has expired, replacement parts will be warrantied for 90 days from part purchase date. Labour not included. Unit serial number required.

[2] 50-173 Westport Fan Kit covered for up to 5 years from purchase date. Labour not included. Unit serial required.

[3] Excluding damage to the finish caused by improper setup of the appliance, or color changes.

[4] Log set and panels excludes wear and tear or breakage caused by cleaning or service.

[4] Glass is covered for thermal breakage. Photos of box, inside of door, and unit serial # must be supplied for breakage due to shipping.

[6] Exterior Surface finishing covers plating, enamel or paint and excludes colour changes, chipping, and fingerprints.

Travel costs not included.

Jan 2018

Installation Data Sheet

The following information must be recorded by the installer for warranty purposes and future reference.

NAME OF OWNER:

_____

ADDRESS:

_____

_____

_____

PHONE:_____

NAME OF DEALER:

_____

ADDRESS:

_____

_____

_____

PHONE:_____

MODEL:_____

SERIAL NUMBER:_____

DATE OF PURCHASE: _____ (dd/mm/yyyy)

DATE OF INSTALLATION:_____(dd/mm/yyyy)

☐ DIRECT VENT

☐ NATURAL GAS (NAT) ☐ PROPANE(LPG)

INLET GAS PRESSURE:_____in WC

MAIN BURNER ORIFICE:_____# DMS

PILOT ORIFICE #_____OR_____in diam.

INSTALLER'S SIGNATURE:

_____

NAME OF INSTALLER:

_____

ADDRESS:

_____

_____

_____

PHONE:_____

MANUFACTURED BY:
SHERWOOD INDUSTRIES LTD.
6782 OLDFIELD RD. SAANICHTON, BC, CANADA V8M 2A3
www.enviro.com
Summer 2021
C-15550